ideal HEATING

INSTALLATION & SERVICING

MEXICO HE
15 18 24 30 36

When replacing any part on this appliance, use only spare parts that you can be assured conform to the safety and performance specification that we require. Do not use reconditioned or copy parts that have not been clearly authorised by Ideal Heating.

For the very latest copy of literature for specification and maintenance practices visit our website idealheating.com where you can download the relevant information in PDF format.

October 2026
UIN 201787 A18

ERP DATA

			MODEL				
	SYMBOL	**UNITS**	**15**	**18**	**24**	**30**	**36**
Condensing Boiler	n/a	n/a	yes	yes	yes	yes	yes
Low Temperature Boiler	n/a	n/a	no	no	no	no	no
B1 Boiler	n/a	n/a	no	no	no	no	no
Cogeneration Space Heater	n/a	n/a	no	no	no	no	no
Equipped with a Supplementary Heater	n/a	n/a	no	no	no	no	no
Combination Heater	n/a	n/a	no	no	no	no	no
Nominal Heat Output for Space Heating							
Full Load	P_4	kW	14.8	18.3	23.8	30.1	37.1
Part Load	P_1	kW	5.0	6.1	7.9	9.9	12.1
Auxiliary Electricity Consumption							
Full Load	el_{max}	kW	0.038	0.038	0.038	0.042	0.042
Part Load	el_{min}	kW	0.024	0.024	0.024	0.028	0.028
Standby	P_{SB}	kW	0.01	0.01	0.01	0.01	0.01
Seasonal Space Heating Energy Efficiency							
Full Load	η_4	%	88.5	88.2	87.9	88.5	89.0
Part Load	η_1	%	99	98.5	97.1	97.2	97.3
Standby Loss	P_{stby}	kW	0.055	0.055	0.055	0.055	0.055
Ignition	P_{ign}	kW	0	0	0	0	0
Emissions Nox (Gross)	$NO_{x,\ pond\ Hs}$	mg/kWh	14	12	17	18	23
Annual Energy Consumption	Q_{HE}	GJ	46.0	57.0	75.0	94.0	116.0
Sound Power Level, Indoors	L_{WA}	dB	40	41	42	45	45

PRODUCT FICHE

MEXICO HE HEAT BOILER
Ideal Heating
ERP DATA

	SYMBOL	UNITS	MODEL				
			15	**18**	**24**	**30**	**36**
Condensing boiler			Yes				
Seasonal Space heating efficiency class			A				
Rated heat output		kW	15	18	24	30	36
Seasonal space heating energy efficiency	η_s	%	93*	93*	92*	92*	92*
Annual energy consumption	Q_{HE}	GJ	46.0	57.0	75.0	94.0	116.0
Sound power level, indoors	L_{WA}	dB	40	41	42	45	45

Seasonal Space Heating Energy Efficiency of the Boiler	*%	**A**
Temperature control (from fiche of temperature control)	%	**B**

Class I	*Class II*	*Class III*	*Class IV*	*Class V*	*Class VI*	*Class VII*	*Class VIII*
1%	*2%*	*1.5%*	*2%*	*3%*	*4%*	*3.5%*	*5%*

Solar Contribution (from fiche of solar device)

Collector Size (in m^2)	Tank Volume (in m^3)	Collector Efficiency (in %)	Tank rating A* = 0.95 A = 0.91 B = 0.86 C = 0.83 D-G = 0.81		
= (‘*III* ’x [ ]	+ ‘*IV* ’ x [ ])	x 0.9 x ([ ]	/ 100 x [ ]	=	% **C**

Seasonal Space Heating Energy Efficiency of Package **TOTAL: A+B+C=** %

Seasonal Space Heating Energy Efficiency Class of Package

G	F	E	D	C	B	A	A+	A++	A+++
< 30%	≥ 30%	≥ 34%	≥ 36%	≥ 75%	≥ 82%	≥ 90%	≥ 98%	≥ 125%	≥ 150%

The energy efficiency of the package of products provided for in this document may not correspond to its actual energy efficiency once installed in a building, as the efficiency is influenced by further factors such as heat loss in the products in relation to the building size and its characteristics

NOTES FOR THE INSTALLER

FOR ANY TECHNICAL QUERIES PLEASE RING THE IDEAL INSTALLER/TECHNICAL HELPLINE : 01482 498663

DOCUMENT AMENDMENTS

Relevant Installation changes implemented in this book from Mod Level ..... A16 (Mar 20) to A17 (Sep 21)

Rebrand and legislation update

Page 60 - Added: WEEE Directive and UKCA logo.

Rebrand update throughout from Ideal Boilers to Ideal Heating.

GENERAL

Table 1 - General Data

Boiler Size			HE15	HE18	HE24	HE30	HE36
Gas Supply Connection		in. BSP	Rc $^1/_2$	Rc $^1/_2$	Rc $^1/_2$	Rc $^1/_2$	Rc $^1/_2$
Flow and Return Connections			22mm copper	22mm copper	22mm copper	22mm copper	22mm copper
MAXIMUM Static Water Head		m	30.5	30.5	30.5	30.5	30.5
MINIMUM Static Water Head		m	0.45	0.45	0.45	0.45	0.45
Electrical Supply			230V - 50Hz	230V - 50Hz	230V - 50Hz	230V - 50Hz	230V - 50Hz
Power Consumption			38W	38W	38W	42W	42W
Fuse Rating			External : 3A internal T3.15A L250V				
Water Content		litre	2.0	2.0	2.0	4.7	4.7
Packaged Weight		kg.	55.4	55.4	55.4	69	69
Maximum Inst Weight		kg.	52	52	52	68	68
Boiler Size	Height	mm	850	850	850	850	850
	Width	mm	450	450	450	450	450
	Depth	mm	530	530	530	530	530
Gas Type			I2H-G20	I2H-G20	I2H-G20	I2H-G20	I2H-G20
Gas Supply Pressure			20mb	20mb	20mb	20mb	20mb
Flue duct diameter		mm	100	100	100	100	100
Flue horizontal duct length (max)		m	6	6	6	3	3

Table 2 - Performance Data

Boiler Size			HE15 max	HE18 max	HE24 max	HE30 max	HE36 max	HE15-24 min	HE30-36 min
Input 'Q'	Nett CV	kW	15.1	18.7	24.4	30.7	37.5	9.1	10.6
	Gross CV	kW	16.8	20.7	27.1	34.0	41.6	10.1	11.8
	Gas Consumption l/s (cu.ft/h)		0.43	0.53	0.70	0.88	1.07	0.26	0.30
Output 'P'	70°c Mean Water temp. kW		14.6	18.2	23.4	30.1	37.0	8.8	10.6
	40°c Mean Water temp. kW		15.5	19.2	25.1	32.8	39.8	9.6	11.4
Seasonal efficiency (SEDBUK)* 2005		Band A	90.4%	90.3%	90.2%	90.4%	90.7%	-	-
Seasonal efficiency (SEDBUK)* 2009		Band A	89.7%	89.4%	88.8%	88.9%	89.1%	-	-
NOx classification			Class 6						

***** The value is used in the UK Government's Standard Assessment Procedure (SAP) for energy rating of dwellings. The test data from which it has been calculated have been certified by a notified body.

Note.

Gas consumption is calculated using a calorific value of 38.7 MJ/m³ (1038 Btu/ft³) gross or 34.9 MJ/m³ (935 Btu/ft³) nett. To obtain the gas consumption at a different calorific value:-

a. *For l/s - divide the gross heat input (kW) by the gross C.V. of the gas (MJ/m³)*

b. *For ft³/h - divide the gross heat input (Btu/h) by the gross C.V. of the gas (Btu/ft³)*

c. ***For m³/h*** *- multiply l/s by 3.6*

Key to symbols

GB = United Kingdom **IE** = Ireland (Countries of destination)

PMS = Maximum operating pressure of water

$\mathbf{C_{13}}$ $\mathbf{C_{33}}$ = A room sealed appliance designed for connection via ducts to a horizontal or vertical terminal which admits fresh air to the burner and discharges the products of combustion to the outside through orifices which, in this case, are concentric. The fan is up stream of the combustion chamber.

$\mathbf{I_{2H}}$ = An appliance designed for use on 2nd Family gas, Group H only.

CAUTION. To avoid the possibility of injury during the installation, servicing or cleaning of this appliance, care should be taken when handling edges of sheet steel components.

mexico HE

Natural Gas only

Boiler size	G.C. Appliance No. (Benchmark No.)
HE15	41-429-39
HE18	41-429-65
HE24	41-429-98
HE30	41-429-99
HE36	41-415-20

Destination Countries: GB, IE

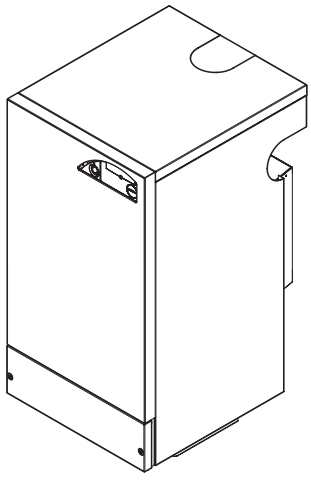

CONTENTS

Air Supply 11
Benchmark Commissioning Checklist 53
Boiler Clearances 8
Boiler Exploded Diagram 16
Electrical Connections 29
Electrical Supply 11
Electrical Systems Diagrams 31
Extension Ducts - Fitting 24
Fault Finding 47-50
Flow Wiring Diagram 30
Flue Fitting 21-28
Flue Installation Requirements 10
Gas Safety Regulations 9
Gas Supply 10
Initial Lighting 32
Installation 16-33
Mandatory Requirements 9
Safe Handling 9
Servicing 34-46
Spare Parts 51
Terminal Guards 10
Thermostatic Radiator valves 11
Water and Systems 12-15
Water Connections 8,19
Water Treatment 15
Wiring Diagrams 29-31

For GB, to comply with Building Regulations Part L1 (Part 6 in Scotland) the boiler should be fitted in accordance with the manufacturer's instructions. Self-certification that the boiler has been installed to comply with Building Regulations can be demonstrated by completing and signing the Benchmark Commissioning Checklist.

Before installing this boiler, read the Code of Practice sheet at the rear of this book.

BENCHMARK COMMISSIONING CHECKLIST DETAILS

Boiler	**Page**
Make and model	7
Appliance serial no. on data badge	16
SEDBUK No. %	6
Controls	
Time and temperature control to heating	31
Time and temperature control to hot water	31
Heating zone valves	n/a
TRV's	11
Auto bypass	11
Boiler interlock	11
For	**all boilers**
Flushing to BS.7593	15
Inhibitor	15
Central heating mode	
Heat input	to be calculated
Burner operating pressure	measure and record
Central heating flow temp.	measure and record
Central heating return temp.	measure and record
For combination boilers only	
Scale reducer	n/a
Hot water mode	
Heat input	n/a
Max. operating burner pressure	n/a
Max. operating water pressure	n/a
Cold water inlet temp	n/a
Hot water outlet temp.	n/a
Water flow rate at max. setting	n/a
For condensing boilers only	
Condensate drain	19

For all boilers: *complete, sign & hand over to customer*

For assistance see Technical Helpline on the back page

NOTE TO THE INSTALLER: COMPLETE THE BENCHMARK COMMISSIONING CHECKLIST AND LEAVE THESE INSTRUCTIONS WITH APPLIANCE

benchmark
COLLECTIVE MARK
THE MARK OF QUALITY FOR THE INSTALLATION, COMMISSIONING AND SERVICING OF DOMESTIC HEATING AND HOT WATER SYSTEMS

1 BOILER SERVICE CONNECTIONS

1. This appliance is NOT suitable for use in a direct hot water system.
2. If the boiler is to be used on a sealed system an **Overheat Thermostat** is fitted as standard.

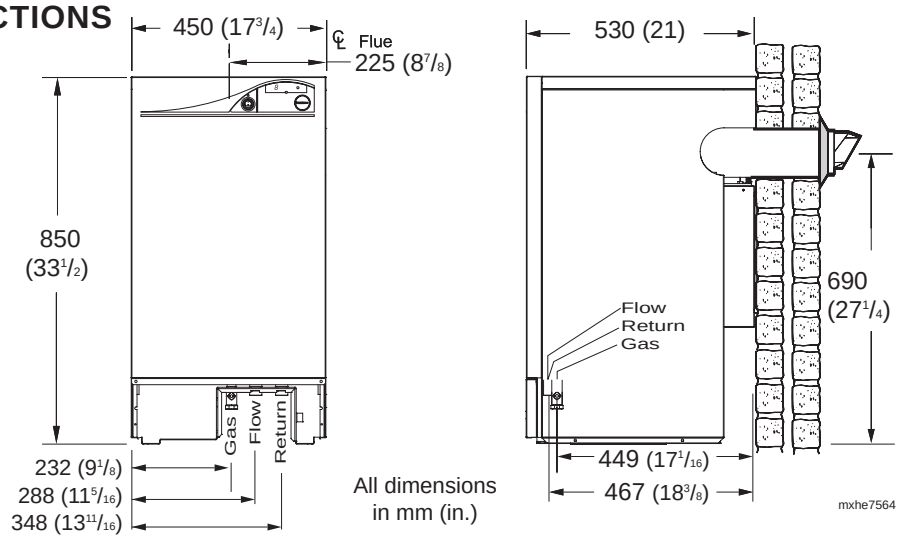

All dimensions in mm (in.)

2 FLOOR MOUNTING AND BOILER CLEARANCES

Flammable materials must not be placed in close proximity to the appliance. Materials giving off flammable vapours must not be stored in the same room as the appliance.

Boiler Model	Flue Length	Overall Space Dim. Depth	Height	Width
HE15	6m	530	870	460
HE18	6m	530	870	460
HE24	6m	530	870	460
HE30	3m	530	870	460
HE36	3m	530	870	460

Floor mounting

1. The floor must be flat, level and of suitable load bearing capacity.
2. The back of the boiler may be fitted up to the wall.

Boiler clearances

The minimum overall dimensions of the space in which the boiler is to operate and to facilitate servicing are as shown

Additional space may be required for installation, depending upon site conditions.

In addition a MINIMUM clearance of 450 mm (17 3/4") MUST be available at the front of the boiler, for servicing.

Minimum front clearance when built behind a concealing panel is 5mm (1/4").

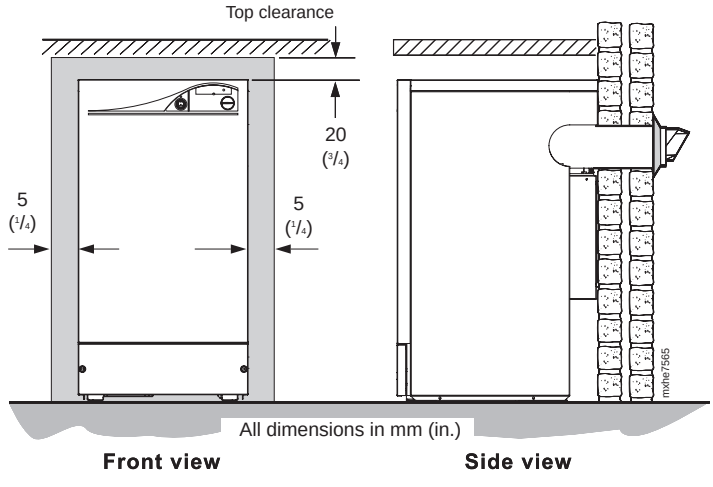

All dimensions in mm (in.)

Front view **Side view**

INTRODUCTION

The mexico HE range of boilers are fully automatically controlled, floor standing, low water content, balanced flue, fanned, condensing gas boilers. They have full modulating central heating outputs of :

HE15 8.8 kW to 14.6 kW.

HE18 8.8 kW to 18.2 kW.

HE24 8.8 kW to 23.4 kW.

HE30 10.6 kW to 30.1 kW.

HE36 10.6 kW to 37.0 kW.

Due to the very high efficiency of the boiler a plume of water vapour will form at the flue terminal during operation depending on external conditions.

The boiler casing is of white painted mild steel with the user controls capable of being mounted remotely from the boiler, if the option is required.

The heat exchanger is of cast aluminium.

Artificially softened water must NOT be used.

A pre-piping frame is provided to allow system and gas connection to be made prior to boiler installation.

Note.
These boilers cannot be used on systems which include gravity circulation.

The boilers are suitable for connection to fully pumped, open vented or sealed water systems. Adequate arrangements for completely draining the system by provision of drain cocks MUST be provided in the installation pipework.

OPERATION

When there is a demand for heat, the heating system is supplied at the selected temperature of between 30°C and 82°C.

The boiler features a comprehensive diagnostic system which gives detailed information on the boiler status when operating, and performance of key components to aid commissioning and fault finding.

SAFE HANDLING

This boiler may require 2 or more operatives to move it to its installation site, remove it from its packaging base and during movement into its installation location. Manoeuvring the boiler may include the use of a sack truck and involve lifting, pushing and pulling.

Caution should be exercised during these operations.

Operatives should be knowledgeable in handling techniques when performing these tasks and the following precautions should be considered:

- Grip the boiler at the base.
- Be physically capable.
- Use PPE as appropriate, e.g. gloves, safety footwear.

During all manoeuvres and handling actions, every attempt should be made to ensure the following unless unavoidable and/or the weight is light.

- Keep back straight.
- Avoid twisting at the waist.
- Avoid upper body/top heavy bending.
- Always grip with the palm of the hand.
- Use designated hand holds.
- Keep load as close to the body as possible.
- Always use assistance if required.

OPTIONAL EXTRA KITS

FLUING:

- **Flue Extension Ducts.** (1000mm long)
  HE15, 18 & 24 -up to 6m
  HE30, & 36 - up to 3m
- **90° Elbow Kit** (60/100 dia maximum no. per installation)
  HE15, 18 & 24 -up to 4 elbows
  HE30, & 36 - up to 2 elbows
- **45° Elbow Kit** (60/100 dia maximum no. per installation)
  HE15, 18 & 24 -up to 4 elbows
  HE30, & 36 - up to 2 elbows
- **Concentric Flue Screw Retaining Kit**
- **Roof Flue Kit** (60/100)
  HE15, 18 & 24 -up to a maximum of 8m
  HE30, & 36 -up to a maximum of 5m
- **Pitched Roof Tile** (for roof flue kit)
- **Flat Roof Tile** (for roof flue kit)
- **Vertical Flue Adaptor**
- **Vertical Outlet Flue Kit with Elbow** (60/100)
  HE15, 18 & 24 - to a maximum length of 6m
  HE30, & 36 - to a maximum length of 3m
- **Flue Finishing Kit**
- **High Level Flue Outlet Kit**
- **Flue Deflector Kit**

OTHER OPTIONAL KITS:

- **Remote User Control Kit**
- **Condensate Pump Kit**
- **Concealment Panel Kit**
- **RS Boiler Terminal Wall Plate Kit**
- **Adjustable Flue Support Bracket**

SAFETY

Current Gas Safety (Installation and Use) Regulations or rules in force.

The appliance is suitable only for installation in GB and IE and should be installed in accordance with the rules in force.

In GB, the installation must be carried out by a Gas Safe Registered Engineer. It must be carried out in accordance with the relevant requirements of the:

- Gas Safety (Installation and Use) Regulations
- The appropriate Building Regulations either The Building Regulations, The Building Regulations (Scotland), Building Regulations (northern Ireland).
- The Water Fittings Regulations or Water bye-laws in Scotland.
- The Current I.E.E. Wiring Regulations.

Where no specific instructions are given, reference should be made to the relevant British Standard Code of Practice.

In IE, the installation must be carried out by a Registered Gas Installer and installed in accordance with the current edition of I.S.813 “Domestic Gas Installations”, the current Building Regulations and reference should be made to the current ETCI rules for electrical installation.

Detailed recommendations are contained in the following British Standard Codes of Practice:

BS. 5440:1 Flues (for gas appliances of rated input not exceeding 70 kW).

BS. 5440:2 Ventilation (for gas appliances of rated input not exceeding 70 kW).

BS. 5449 Forced circulation hot water systems.

BSEN. 12828:2003 Heating Systems in buildings: Design for water based heating systems.

BSEN 12831:2003 Heating Systems in buildings: Method for calculation of the design heat load.

BSEN 14336:2004 Heating Systems in buildings: Installation and commissioning of water based heating systems.

BS. 5546 Installation of gas hot water supplies for domestic purposes (2nd Family Gases).

BS. 6798 Installation of gas fired hot water boilers of rated input not exceeding 60 kW.

BS. 6891 Low pressure installation pipes.

Health & Safety Document No. 635

The Electricity at Work Regulations, 1989.

The manufacturer’s notes must NOT be taken, in any way, as overriding statutory obligations.

IMPORTANT. These appliances are CE certificated for safety and performance. It is, therefore, important that no external control devices, e.g. flue dampers, economisers etc., are directly connected to these appliances unless covered by these Installation and Servicing Instructions or as otherwise recommended by **Ideal Heating** in writing. If in doubt please enquire.

Any direct connection of a control device not approved by **Ideal Heating** may invalidate the certification and the normal appliance warranty. It could also infringe the Gas Safety Regulations and the above regulations.

SAFE HANDLING OF SUBSTANCES

Care should be taken when handling the boiler insulation panels, which can cause irritation to the skin. No asbestos, mercury or CFCs are included in any part of the boiler or its manufacture.

LOCATION OF BOILER

The boiler must be installed on a flat and level floor, capable of adequately supporting the weight of the boiler and any ancillary equipment.

The boiler may be fitted on a combustible floor. Insulation is not necessary, unless required by the local authority.

For electrical safety reasons there must be no access from the back of the boiler.

The boiler must not be fitted outside.

Timber Framed Buildings

If the boiler is to be fitted in a timber framed building it should be fitted in accordance with the Institute of Gas Engineering document IGE/UP/7:2006.

Bathroom Installations

This appliance is rated **IP20.**

The boiler may be installed in any room or internal space, although particular attention is drawn to the requirements of the current IEE (BS.7671) Wiring Regulations and the electrical provisions of the building regulations applicable in Scotland, with respect to the installation of the boiler in a room or internal space containing a bath or shower. For IE reference should be made to the current ETCI rules for electrical installations and I.S. 813:2002.

If the appliance is to be installed in a room containing a bath or shower then, providing water jets are not going to be used for cleaning purposes (as in communal baths/showers), the appliance must be installed beyond Zone 2, as detailed in BS.7671.

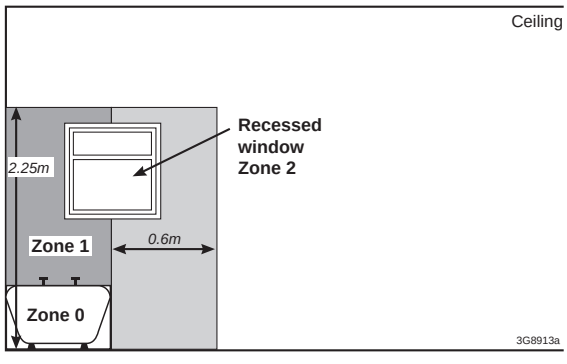

Compartment Installations

A compartment used to enclose the boiler should be designed and constructed specially for this purpose.
An existing cupboard or compartment may be used, provided that it is modified for the purpose.

In both cases details of essential features of cupboard / compartment design, including airing cupboard installation, are to conform to the following:

- BS. 6798. (No cupboard ventilation is required - see “Air Supply” for details).
- The position selected for installation MUST allow adequate space for servicing in front of the boiler.
- For the minimum clearances required for safety and subsequent service see Frame 2.
- This position **MUST** also permit the provision of a satisfactory flue termination.
- Boiler may be fitted under a worktop/surface. Boiler can be fitted behind a kitchen cupboard door without need for ventilation.

GAS SUPPLY

The local gas supplier should be consulted, at the installation planning stage, in order to establish the availability of an adequate supply of gas. An existing service pipe must NOT be used without prior consultation with the local gas supplier.

The boiler MUST be installed on a gas supply with a governed meter only.

A gas meter can only be connected by the local gas supplier or by a Gas Safe Registered Engineer. In IE by a Registered Gas Installer (RGII).

An existing meter should be checked, preferably by the gas supplier, to ensure that the meter is adequate to deal with the rate of gas supply required.

It is the responsibility of the Gas Installer to size the gas installation pipework in accordance with BS6891:2005. Whilst the principle of the 1:1 gas valve ensures the Mexico HE range is able to deliver it’s full output at inlet pressures as low as 14mb, other gas appliances in the property may not be as tolerant. When operating pressures are found to be below the minimum meter outlet of 19mb these should be checked to ensure this is adequate for correct and safe operation.

Allowing for the acceptable pressure loss of 1mb across the installation pipework, it can be assumed that a minimum permitted operating pressure of 18mb will be delivered to the inlet of the appliance. (Reference BS 6400-1 Clause 6.2 Pressure Absorption).

The external gas cock could further reduce the operating pressure when measured at its test point. The pressure drop is relative to the heat input to the boiler (kW), refer to graph below.

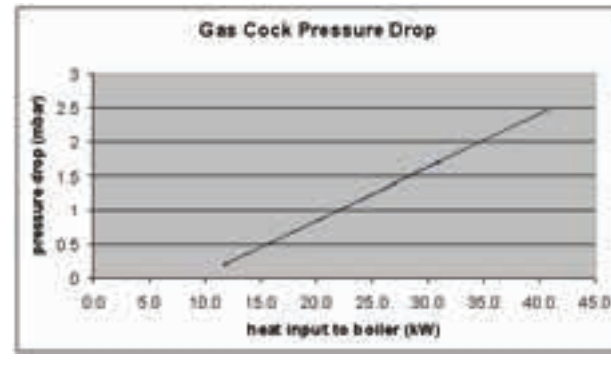

IMPORTANT.
Installation pipes MUST be fitted in accordance with BS. 6891. In IE refer to I.S.813:2002. Pipework from the meter to the boiler MUST be of an adequate size, i.e. no longer than 20m and not less than 15mm O.D.

The complete installation MUST be tested for gas tightness and purged as described in the above code.

FLUE INSTALLATION

Pluming will occur at the terminal so terminal positions which would cause a nuisance should be avoided.

The flue must be installed in accordance with the recommendations of BS.5440-1:2008. In IE refer to I.S.813:2002.

The following notes are intended for general guidance.

1. The boiler MUST be installed so that the terminal is exposed to external air.
2. It is important that the position of the terminal allows the free passage of air across it at all times.
3. Minimum acceptable spacing from the terminal to obstructions and ventilation openings are specified in Table 3.
4. Where the lowest part of the terminal is fitted less than 2m (6’6”) above a balcony, above ground or above a flat roof to which people have access, then the terminal MUST be protected by a purpose designed guard. Ensure that the guard is fitted centrally.

   Terminal guards are available from boiler suppliers. Ask for TFC Flue Guard Model No. K6 (round plastic-coated). In case of difficulty contact:

TFC Group Ltd. Tel. + 44 (0) 01732 351 680
Tower House, Vale Rise Fax. +44(0) 01732 354 445
Tonbridge. kent TN9 1TB www.tfc-group.co.uk

5. The flue assembly shall be so placed or shielded as to prevent ignition or damage to any part of any building.
6. The air inlet/products outlet duct and the terminal of the boiler MUST NOT be closer than 25mm (1") to combustible material. Detailed recommendations on the protection of combustible material are given in BS.5440-1:2008. In IE refer to I.S.813:2002.

IMPORTANT. It is essential to ensure, in practice, that products of combustion discharging from the terminal cannot re-enter the building or buildings through any openings into the building such as ventilators, windows, doors, or other sources of natural air infiltration, such as forced ventilation openings etc.

If products of combustion re-entry is identified or suspected this should be immediately investigated and corrected following the guidance provided in the current Gas Industry Unsafe Situation Procedure.

Table 3 - Balanced Flue Terminal Position

Flue Terminal Positions	Min. Spacing*
1. Directly below or alongside an opening window, air vent or other ventilation opening.	300mm
2. Below guttering, drain pipes or soil pipes. *BS5440-1 2008*	25mm* *75mm*
3. Below eaves. *BS5440-1 2008*	25mm* *200mm*
4. Below balconies or a car port roof. *BS5440-1 2008*	25mm* *200mm*
5. From vertical drain pipes or soil pipes. *BS5440-1 2008*	25mm* *150mm*
6. From an internal or external corner or to a boundary along side the terminal. *BS5440-1 2008*	25mm* *300mm*
7. Above adjacent ground, roof or balcony level.	300mm
8. From a surface or a boundary facing the terminal.	600mm
9. From a terminal facing a terminal.	1,200mm
10. From an opening in a car port (e.g. door or window) into dwelling.	1,200mm
11. Vertically from a terminal on the same wall.	1,500mm
12. Horizontally from a terminal on the wall.	300mm
Vertical Terminals	
13. Above the roof pitch with roof slope of all angles. Above flat roof.	300mm 300mm
14. From a single wall face. From corner walls.	600mm 1000mm
15. Below Velux Window	2000mm
16. Above or side of velux window	600mm

** Only one reduction down to 25mm is allowable per installation otherwise BS5440-1 2008 dimensions must be followed.*

TERMINAL

The terminal assembly can be adapted to accommodate various wall thicknesses. Refer to Frame 19.

AIR SUPPLY

It is NOT necessary to have a purpose-provided air vent in the room or internal space in which the boiler is installed. Neither is it necessary to ventilate a cupboard or compartment in which the boiler is installed, due to the low surface temperatures of the boiler casing during operation; therefore the requirements of BS 6798, Clause 12, and BS 5440:2 may be disregarded. In IE the requirements of I.S.813:2002 may be disregarded.

WATER CIRCULATION SYSTEM

IMPORTANT.

A minimum length of 1 metre of copper pipe MUST be fitted to both flow and return connections from the boiler before connection to any plastic piping.

For boiler outputs greater than 60,000 btu/h (17.6 kW) the flow and return pipework should be connected in 28mm pipe.

For the types of system and correct piping procedure see Frames 1, and 3 to 8.

The central heating system should be in accordance with BS.6798 and, in addition, for smallbore and microbore systems, BS.5449.

WATER TREATMENT - see Frame 9

The hot water storage cylinder MUST be of the indirect type and should preferably be manufactured of copper.

Single feed, indirect cylinders are not recommended and MUST NOT be used on sealed systems.

The appliances are NOT suitable for gravity central heating nor are they suitable for the provision of gravity domestic hot water.

The hot water cylinder and ancillary pipework, not forming part of the useful heating surface, should be lagged to prevent heat loss and any possible freezing - particularly where pipes run through roof spaces and ventilated underfloor spaces.

The boiler must be vented.

The hydraulic resistance of the boilers, at MAXIMUM OUTPUT, is shown in Graph 1.

Graph 1 - Water flow rate and pressure loss

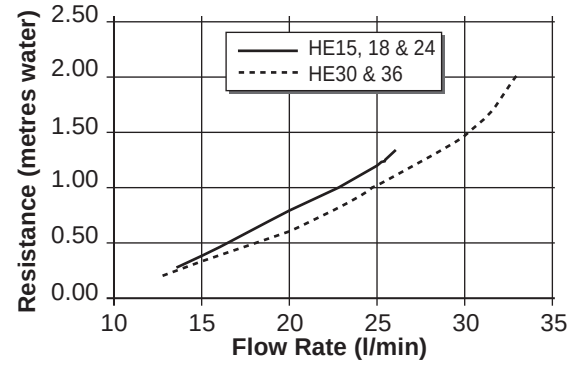

BOILER CONTROL INTERLOCKS

Ideal Heating recommend that heating systems utilising full thermostatic radiator valve control of temperature in individual rooms should also be fitted with a room thermostat controlling the temperature in a space served by radiators not fitted with such a valve as stated in BS. 5449.

Central heating systems controls should be installed to ensure the boiler is switched off when there is no demand for heating or hot water.

When thermostatic radiator valves are used, the space heating temperature control over a living / dining area or hallway having a heating requirement of at least 10% of the boiler heat output should be achieved using a room thermostat, whilst other rooms are individually controlled by thermostatic radiator valves. However, if the system employs thermostatic radiator valves on all radiators, or two port valves without end switches, then a bypass circuit must be fitted with an automatic bypass valve to ensure a flow of water should all valves be in the closed position.

ELECTRICAL SUPPLY

WARNING.

This appliance must be earthed.

Wiring external to the appliance MUST be in accordance with the current I.E.E. (BS.7671) Wiring Regulations and any local regulations which apply. For Ireland reference should be made to the current ETCI rules for electrical installations.

The point of connection to the mains should be readily accessible and adjacent to the boiler.

N.B. THE FAN VOLTAGE IS 325V DC.

CONDENSATE DRAIN - Refer to Frames 13, 15 and 18

A condensate drain is provided on the boiler. This drain must be connected to a drainage point. All pipework and fittings in the condensate drainage system MUST be made of plastic - *no other materials may be used.*

IMPORTANT.

Installation must be in accordance with BS 6798.

The drain outlet on the boiler is sized for standard 21.5mm (3/4") overflow pipe. It is a universal fitting to allow use of different brands of pipework.

3 OPEN VENT SYSTEM REQUIREMENTS

The system should be vented directly off the boiler flow pipe, as close to the boiler as possible. The cold feed entry should be inverted and MUST be positioned between the pump and the vent, and not more than 150mm (6") away from the vent connection.

Note. *Combined feed and vent pipes may also be fitted.*

There should be a minimum height 450mm (18") of open vent above the cistern water level. If this is not possible refer to Frame 5**.** The vertical distance between the highest point of the system and the feed/expansion cistern water level MUST not be less than 450 mm (18"). The pump must be fitted on the flow side of the boiler.

A suitable pump is a domestic circulator capable of providing a maximum 11°C (20°F) temperature differential across the boiler with the whole of the heating circuit open (e.g. Grundfos UPS 15/50, 15/60 or equivalent). With the minimum flow circuit allowed by the controls the differential must not exceed 25 °C. (18°C for the HE15)

The vertical distance between the pump and feed/expansion cistern MUST comply with the pump manufacturer's minimum requirements, to avoid cavitation. Should these conditions not apply either lower the pump position or raise the cistern above the minimum requirement specified by **Ideal Heating.** The isolation valves should be fitted as close to the pump as possible.

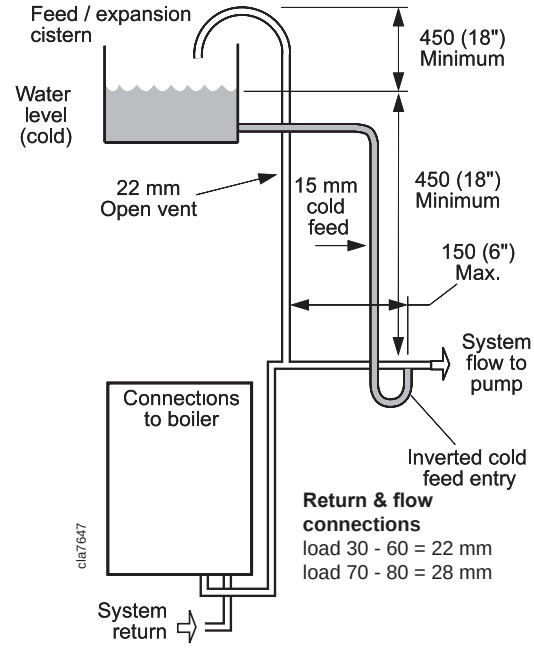

4 SCHEMATIC PIPEWORK AND SYSTEM BALANCING

The boiler does not normally need a bypass but at least some radiators on the heating circuit, of load at least 10% of the minimum boiler output, must be provided with twin lockshield valves so that this minimum heating load is always available (see footnote re. thermostatic radiator valves).

Balancing

1. Set the programmer to ON for both CH and HW. Turn the cylinder thermostat down. Close the manual or thermostatic valves on all radiators, leaving the twin lockshield valves (on the radiators referred to above) in the open position. Turn up the room thermostat and adjust these lockshield valves to give boiler flow and return temperatures not more than 20 °C apart. These valves should now be left as set.
2. Open all manual or thermostatic radiator valves and adjust the lockshield valves on remaining radiators to give around 11°C temperature drop at each radiator.
3. Turn up the cylinder thermostat and adjust the cylinder balancing valve so that the cylinder achieves a maximum flow consistent with adequate flow to the radiators. Check that with only the domestic hot water loop in circuit a differential temperature of 20 °C across the boiler is not exceeded.
4. Adjust room and cylinder thermostats and programmer to NORMAL settings.

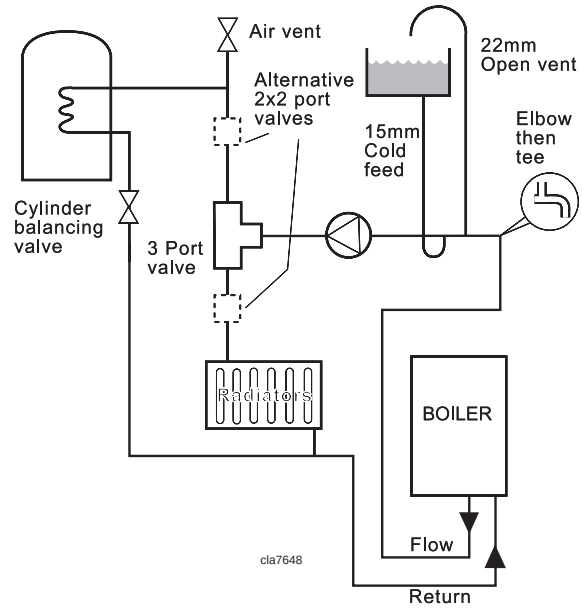

5 LOW HEAD AND LARGE SYSTEMS WITH EXTENSIVE PIPE RUNS - OPEN VENT

This arrangement is useful for large systems where radiators at the extremities are difficult to vent. This can lead to pumping over with conventional feed and vent arrangements.

The following conditions MUST be observed:

1. The top of the automatic air vent must be below the cold water level.
2. The static water level (cold) must be at least 200mm above the top of the horizontal flow pipe, fitted as shown. The vent connection MUST NOT be made immediately off the top of the boiler as venting is made less efficient.
3. The maximum practical length of 22mm cold feed pipe should be used in order to reduce the effective volume of hot system water expanding into the feed/ expansion cistern to a minimum.

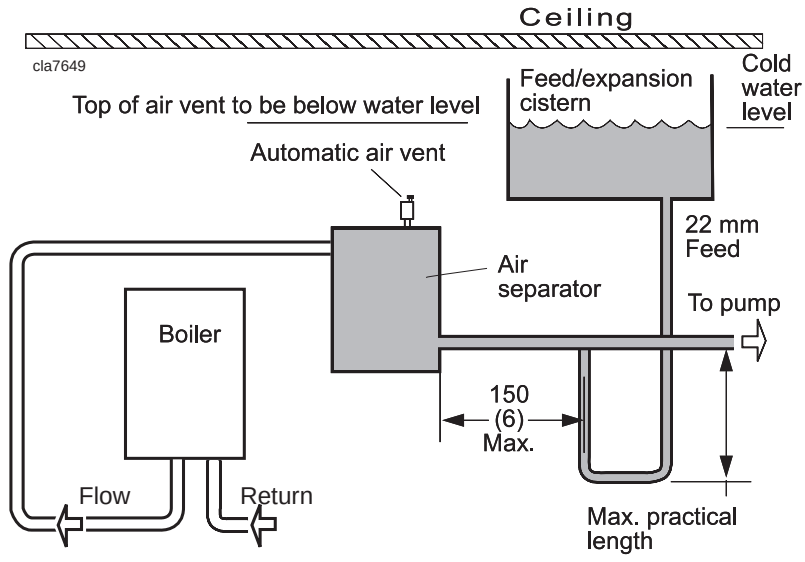

All dimensions in mm (in.).
NB. Imperial dimensions are approximate

Note. *The pump manufacturers' minimum requirements must be complied with.*

6 SEALED SYSTEM REQUIREMENTS

Notes.

a. *The method of filling, refilling, topping up or flushing sealed primary hot water circuit from the mains via a temporary hose connection is only allowed if acceptable to the local water authority.*

b. *When installing the filling device, it must be connected as shown to fully comply with the water regulations. This may involve the fitting of an additional WRAS approval isolator valve to the mains supply.*

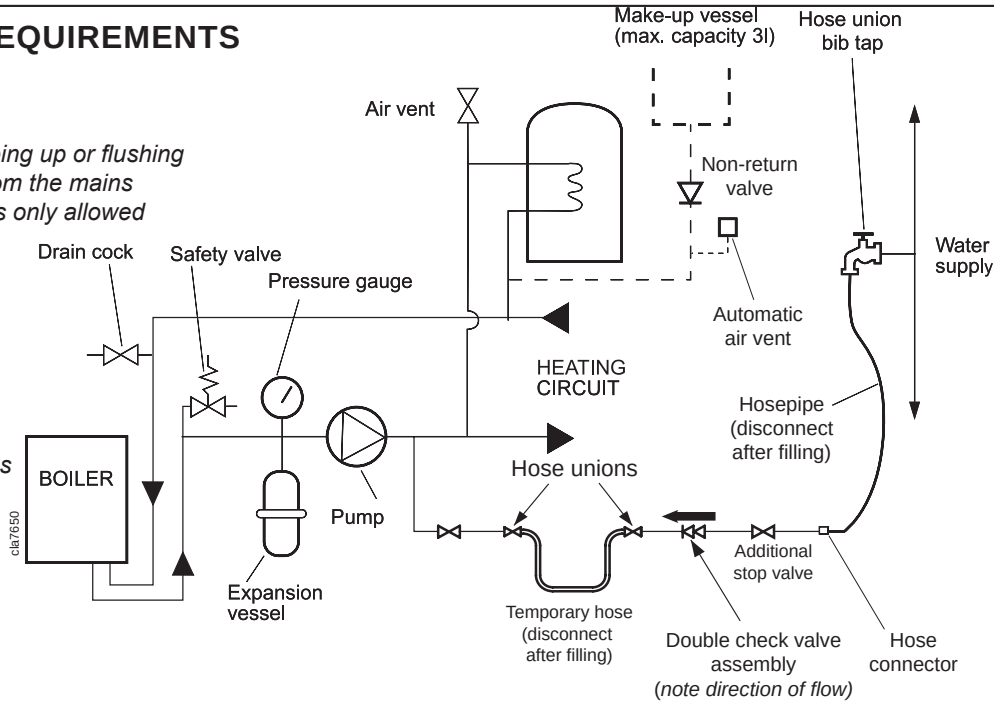

1. General

a. The installation must comply with the requirements of BS. 6798 and BS. 5449.

b. The installation should be designed to work with flow temperatures of up to 82 °C.

c. All components of the system, including the heat exchanger of the indirect cylinder, must be suitable for a working pressure of 3 bar (45lb/in^2) and temperature of 110°C. Care should be taken in making all connections so that the risk of leakage is minimised.

2. Safety Valve

A spring loaded safety valve complying with the relevant requirements of BS. 6759 must be fitted in the flow pipe as close to the boiler as possible and with no intervening valve or restriction. The valve should have the following features:

a. A non-adjustable preset lift pressure not exceeding 3bar (45lb/in^2).

b. A manual testing device.

c. Provision for connection of a discharge pipe. *The valve or discharge pipe should be positioned so that the discharge of water or steam cannot create a hazard to the occupants of the premises or cause damage to electrical components and wiring.*

3. Pressure Gauge

A pressure gauge covering at least the range 0-4 bar (0-60 lb/in^2) must be fitted to the system. The gauge should be easily seen from the filling point and should preferably be connected at the same point as the expansion vessel.

7 SEALED SYSTEM REQUIREMENTS - continued

4. Expansion Vessel

a. A diaphragm type expansion vessel must be connected to a point close to the inlet side of the pump, the connecting pipe being not less than 15 mm (1/2" nominal) size and not incorporating valves of any sort.

b. The vessel capacity must be adequate to accept the expansion of the system water when heated to 110°C (230°F).

c. The charge pressure must not be less than the static water head above the vessel. The pressure attained in the system when heated to 110° C (230° F) should be at least 0.35 bar (5 Ib/in^2) less than the lift pressure of the safety valve.
For guidance on vessel sizing refer to the table in Frame 8.

For further details refer to BS. 5449, BS. 7074:1 and the British Gas Corporation publication 'Material and Installation Specifications for Domestic Central Heating and Hot Water'. For IE refer to the current edition of I.S.813.

5. Cylinder

The cylinder must be either of the indirect coil type or a direct cylinder fitted with an immersion calorifier which is suitable for operating on a gauge pressure of 0.35 bar (5 Ib/in^2) in excess of the safety valve setting. Single feed indirect cylinders are not suitable for sealed systems.

6. Make-up Water

Provision must be made for replacing water loss from the system, either:

a. From a manually filled make-up vessel with a readily visible water level. The vessel should be mounted at least 150 mm (6") above the highest point of the system, and be connected through a non-return valve to the system, fitted at least 300 mm (12") below the make-up vessel on the return side of the domestic hot water cylinder or radiators.

or

b. Where access to a make-up vessel would be difficult by pre-pressurisation of the system. Refer to 'Filling', below.

7. Mains Connection

There must be no direct connection to the mains water supply or to the water storage tank supplying domestic water, even through a non-return valve, without the approval of the local water authority.

8. Filling

The system may be filled by one of the following methods:

a. Through a cistern, used for no other purposes, via a ball valve permanently connected directly to a service pipe and/or a cold water distributing pipe.
The static head available from the cistern should be adequate to provide the desired initial system design pressure. The cold feed pipe from the cistern should include a non-return valve and a stop valve with an automatic air vent connected between them, the stop valve being located between the system and the automatic air vent. The stop valve may remain open during normal operation of the system if automatic water make-up is required.

b. Through a self-contained unit comprising a cistern, pressure booster pump (if required) and, if necessary, an automatic pressure reducing valve and flow restrictor. The cistern should be supplied through a temporary connection from a service pipe or cold water distributing pipe.
This unit may remain permanently connected to the heating system to provide limited automatic water make-up. Where the temporary connection is supplied from a service pipe or distributing pipe which also supplies other draw-off points at a lower level then a double check valve shall be installed upstream of the draw-off point.

c. Through a temporary hose connection from a draw-off tap supplied from a service pipe under mains pressure. Where the mains pressure is excessive a pressure reducing valve shall be used to facilitate filling.

The following fittings shall form a permanent part of the system and shall be fitted in the order stated:

A stop valve complying with the requirements of BS. 1010, Part 2 (the hose from the draw-off tap shall be connected to this fitting).
A test cock.
A double check valve of an approved type.

- Thoroughly flush out the whole of the system with cold water, without the pump in position.
- With the pump fitted, fill and vent the system until the pressure gauge registers 1.5 bar (21.5lb/in^2). Examine for leaks.
- Check the operation of the safety valve by manually raising the water pressure until the valve lifts. This should occur within ± 0.3 bar (± 4.3lb/in^2.) of the preset lift pressure.
- Release water from the system until the initial system design pressure is reached.
- Light the boiler and heat the system to the maximum working temperature. Examine for leaks.
- Turn off the boiler and drain the system while still hot.
- Refill and vent the system.
- Adjust the initial pressure to the required value.

Sizing procedure for expansion vessels: The volume of the expansion vessel (litres) fitted to a sealed system shall not be less than that given by the table on the following page, multiplied by a factor of 0.8 (for flow temperatures of less than 83° C).

8 SEALED SYSTEM REQUIREMENTS - continued

Safety valve setting	3.0 bar			2.5 bar			2.0 bar	
Vessel charge and initial system pressure	0.5 bar	1.0 bar	1.5 bar	0.5 bar	1.0 bar	1.5 bar	0.5 bar	1.0 bar
Total water content of system litres	Expansion vessel volume litres							
25	2.1	2.7	3.9	2.3	3.3	5.9	2.8	5.0
50	4.2	5.4	7.8	4.7	6.7	11.8	5.6	10.0
75	6.3	8.2	11.7	7.0	10.0	17.7	8.4	15.0
100	8.3	10.9	15.6	9.4	13.4	23.7	11.3	20.0
125	10.4	13.6	19.5	11.7	16.7	29.6	14.1	25.0
150	12.5	16.3	23.4	14.1	20.1	35.5	16.9	30.0
175	14.6	19.1	27.3	16.4	23.4	41.4	19.7	35.0
200	16.7	21.8	31.2	18.8	26.8	47.4	22.6	40.0
225	18.7	24.5	35.1	21.1	30.1	53.3	25.4	45.0
250	20.8	27.2	39.0	23.5	33.5	59.2	28.2	50.0
275	22.9	30.0	42.9	25.8	36.8	65.1	31.0	55.0
300	25.0	32.7	46.8	28.2	40.2	71.1	33.9	60.0
Multiplying factors for other system volumes	0.0833	0.109	0.156	0.094	0.134	0.237	0.113	0.20

9 WATER TREATMENT

The mexico HE boiler range have an ALUMINIUM alloy heat exchanger

IMPORTANT. The application of any other treatment to this product may render the guarantee of Ideal Heating invalid.

Ideal Heating recommend water treatment in accordance with the *Benchmark* Guidance Notes on Water Treatment in Central Heating systems.

If water treatment is used **Ideal Heating** recommend only the use of Scalemaster SM-1 PRO, FERNOX, MB-1, ADEY MC1 or SENTINEL-X100 inhibitors and associated water treatment products, which must be used in accordance with the manufacturers' instructions.

Notes.

1. *It is most important that the correct concentration of the water treatment products is maintained in accordance with the manufacturers' instructions.*
2. *If the boiler is installed in an existing system any unsuitable additives MUST be removed by thorough cleansing. BS 7593:2006 details the steps necessary to clean a domestic heating system.*
3. *In hard water areas, treatment to prevent lime scale may be necessary - however the use of artificially softened water is NOT permitted.*
4. *Under no circumstances should the boiler be fired before the system has been thoroughly flushed.*

For further information contact:

Fernox Cookson Electronics
Forsyth Road
Sheerwater
Woking
Surrey GU21 5RZ
+44 (0) 870 601 5000

Sentinel Performance Solutions
The Heath Business & Technical Park
Runcorn
Cheshire WA7 4QX
Tel: 0800 389 4670
www.sentinel-solutions.net

Scalemaster Water Treatment Products
Emerald Way
Stone
Staffordshire ST15 0SR
Tel: +44 (0) 1785 811636

Calmag Ltd.
Unit 3-6, Crown Works
Bradford Road
Sandbeds, Keighley
West Yorkshire BD20 5LN
Tel: +44 (0) 1535 210 320

Adey Professional Heating Solutions
Gloucester Road,
Cheltenham GL51 8NR
Tel: +44 (0) 1242 546700

10 BOILER ASSEMBLY - Exploded view

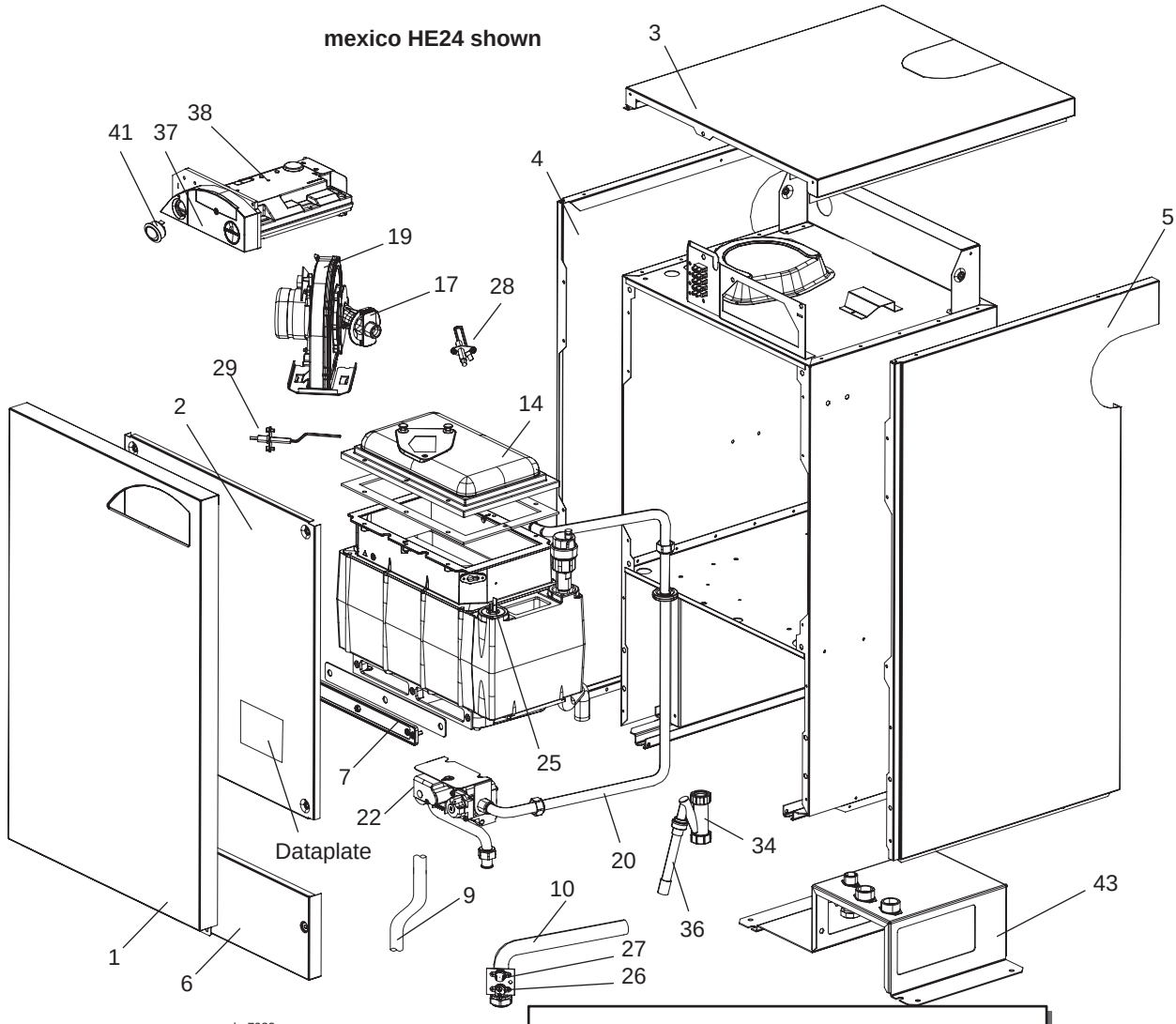

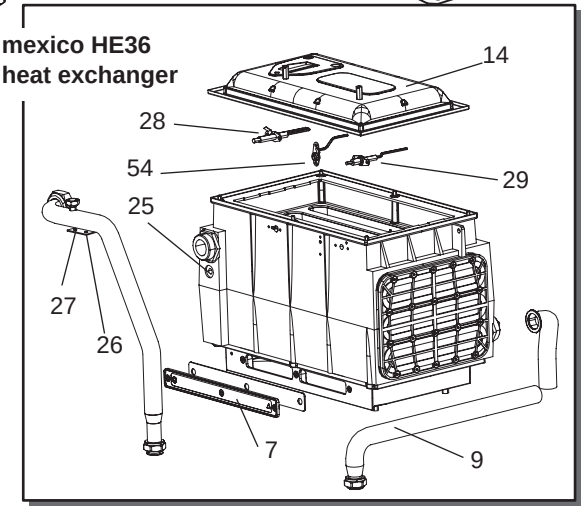

LEGEND

1 Front casing panel
2 Sealing panel
3 Top casing panel
4 LH casing side panel
5 RH casing side panel
6 Lower front panel
7 Sump cover plate
9 Return pipe
10 Flow pipe
14 Burner assembly
17 Injector & housing
19 Fan assembly
20 Gas pipe assembly
22 Gas valve assembly
25 Dry fire thermistor
26 Control thermistor
27 Overheat thermostat
28 Ignition electrode
29 Flame detection electrode
34 Condensate 'S' trap
36 Condensate 'S' trap hose
37 User controls
38 PCB primary control
41 Main switch c/w harness
43 Pre-piping frame
54 Burner earth pin (ionisation probe)

11 UNPACKING

The boiler is supplied fully assembled in Pack A.
A non-telescopic flue assembly for rear or side flue outlet in Pack B is suppled as a separate order.

Unpack and check the contents.

Pack A Contents

A The boiler
B These Installation & Servicing/User Instructions
C Floor standing template
D 1 year guarantee form
E Hardware Pack Box

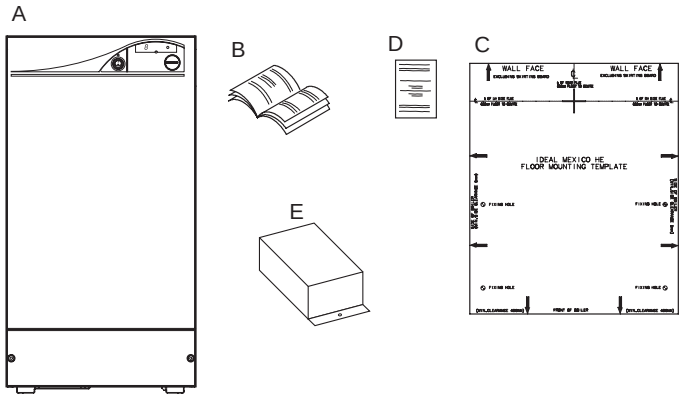

Hardware Pack Box Contents (E)

A Pre-piping frame
B Flue turret
C Screws - 4 off
D Gasket
E Flue connector
F Screws - 5 off
G Condensate Pipe Bracket
H Flue turret lubricant
I Sealing washers - 3 off
(1 x $^1/_2$" gas and 2 x 22mm water connection)

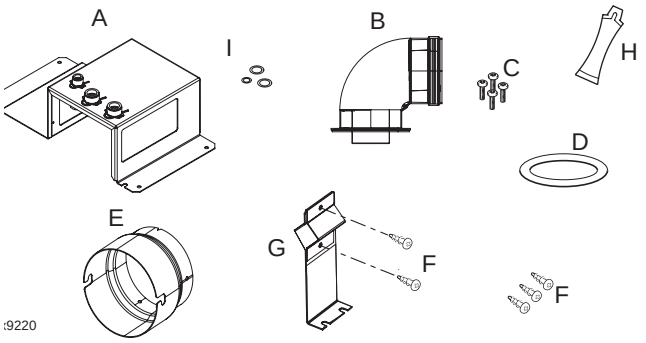

Pack B Contents

Flue terminal



12 PACKAGING REMOVAL

1. Fold back the top flaps and remove outer sleeve.
2. The Installation & Servicing/Users Instructions can be found on top of the boiler.
3. Remove wood screw at bottom rear of boiler, retaining the hardware pack box and remove box.
4. When the boiler is to be fitted to the pre piping Frame (refer to Frame 21) remove the top and inner sleeve and the boiler from its wooden base.

   The inner sleeve can be used to protect the floor when fitting the boiler to the pre-piping frame.

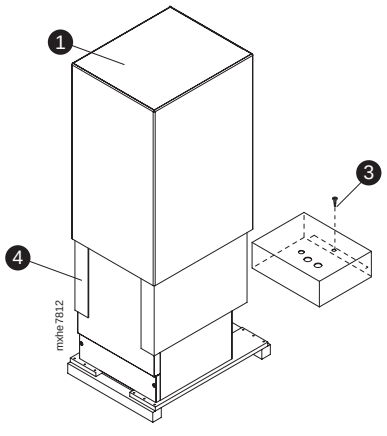

13 FITTING AND CONNECTING THE PRE-PIPING FRAME/CONDENSATE PIPE SUPPORT BRACKET

1. Determine the position required for the boiler and tape template into place.

Note.

The template gives positions for both wall or flush with 600mm deep kitchen units and the positional options of the condensate pipe bracket dependant upon boiler size. To facilitate upward routing of pipework behind boiler, position the template 40mm (minimum) away from the back wall.

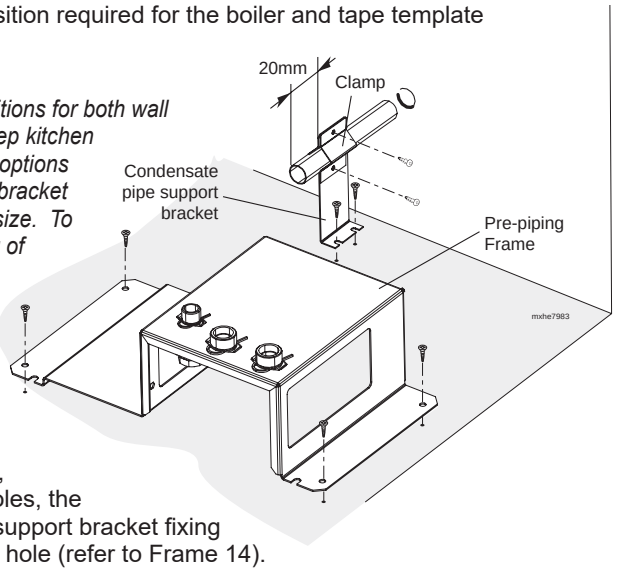

2. Using the floor template, mark the pre-piping frame fixing holes, the boiler fixing holes, the condensate pipe support bracket fixing holes and the flue hole (refer to Frame 14).
3. Drill the 4 holes in the floor and screw the pre-piping frame in place.
4. Drill the 2 holes in the floor and screw the condensate pipe support bracket in place. If the condensate pipe is to be fitted through the rear wall then fit a short piece of plastic pipe to the bracket and mark the wall for drilling. Refer to Frame 15 for condensate drain detail. When complete retain condensate pipe with bracket clamp and fixing screws, protruding 20mm as shown.
5. The gas, water flow and water return can now be connected.

Note. *Measure and cut out flue hole using template (Refer to Frame 14).*

14 FLUE HOLE TEMPLATE

IMPORTANT. Ensure that, during the cutting operation, masonry falling outside of the building does not cause damage or personal injury.

Note.

The template shows the position of the flue hole centres lines. (Flue options can be flush to wall or in line with 600mm deep kitchen units)

1. Extend flue centre line vertically, (for rear, left or right as appropriate), up to 690mm (centre line of flue).
2. Mark onto the wall the position of the flue duct hole.
3. Cut the flue hole preferably with a 125mm (5") coreboring tool, ensuring that the hole is square to the wall.
4. Remove the template from the floor.

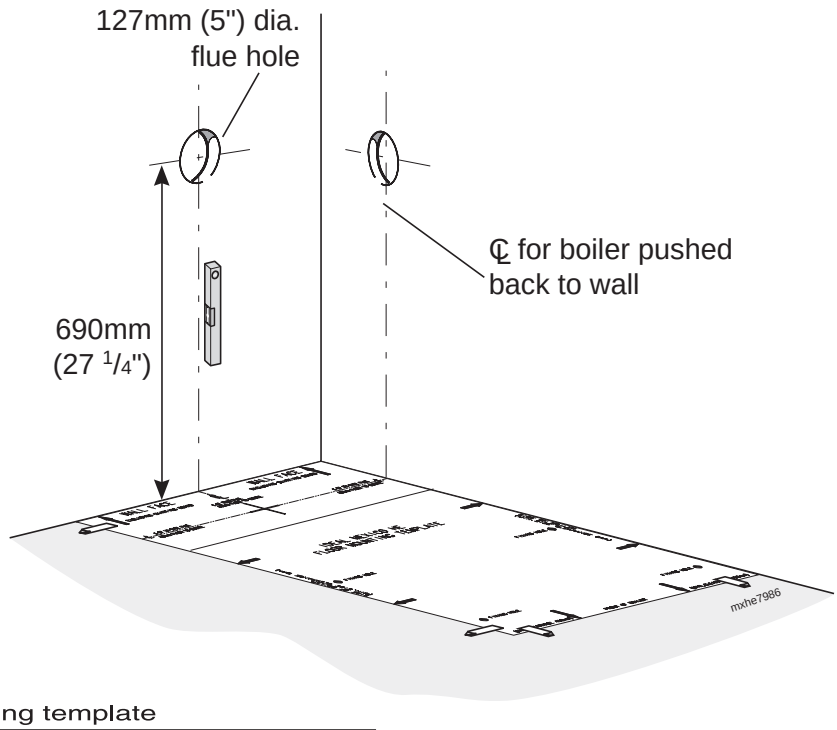

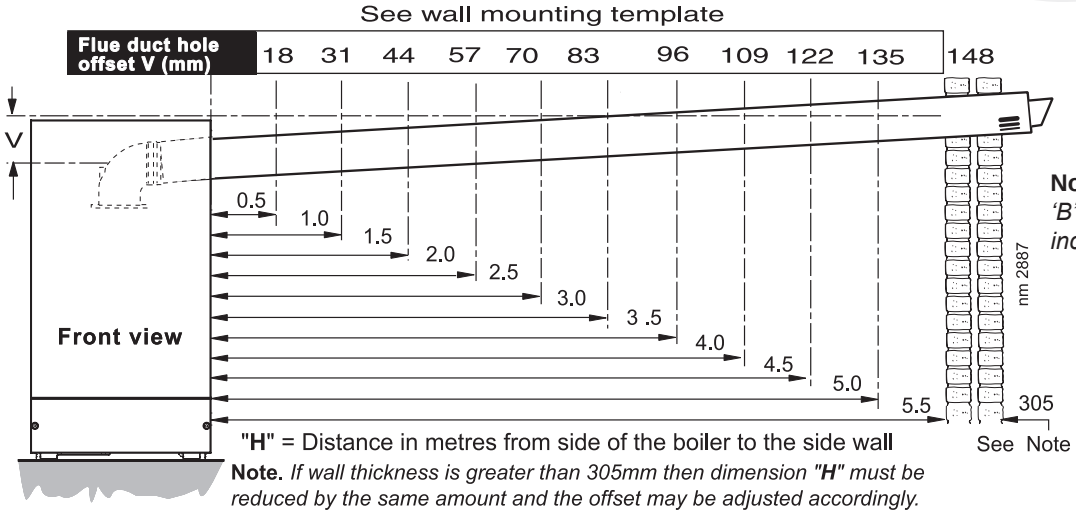

Note. *If only the terminal pack 'B' is used (up to 775mm) no flue incline is required.*

Note. *If wall thickness is greater than 305mm then dimension "**H**" must be reduced by the same amount and the offset may be adjusted accordingly.*

15 GAS CONNECTION

GAS CONNECTION

The boiler gas connection is built into the pre-piping frame.

IMPORTANT. the gas service cock is sealed with a non-metallic fibre washer seal so must not be overheated when making capillary connections.

Refer to Fame 1 for details of the position of the gas connection.

Ensure that the gas supply pipe does not foul the boiler casing.

Refer to Frame 40 for details of the pressure test point position.

16 BOILER WATER CONNECTIONS

The boiler flow and return connections are built into the pre-piping frame.

Note.

For heating loads in excess of 60 000 Btu/h use 28mm x 22mm connectors to connect the boiler flow and return pipes to 28mm.

If flow and return pipes are required to run behind the boiler, this can be facilitated by fitting the boiler in line with the front of 600mm deep kitchen units thus creating a 70mm space behind the boiler.

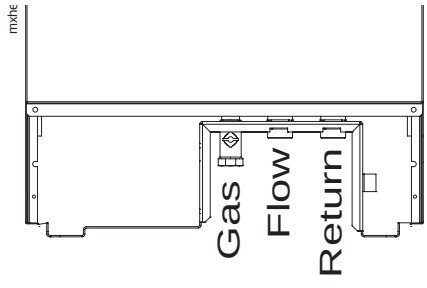

17 CONDENSATE DRAIN

This appliance is fitted with a siphonic 75mm condensate trap system that requires filling before operating the appliance for the 1st time or after maintenance.

All condensate pipework should conform to the following:

a. Where a new or replacement boiler is being installed, access to an internal 'gravity discharge' termination should be one of the main factors considered in determining boiler location.
b. Plastic with push fit or solvent connections.
c. Internal plastic pipe work a minimum of 19mm ID (typically 22mm OD)
d. External plastic pipe must be a minimum of 30mm ID (typically 32 OD) before it passes through the sleeved wall.
e. All horizontal pipe runs, must fall a minimum of 45mm per metre away from the Boiler.
f. External & unheated pipe work should be kept to a minimum and insulated with Class "O" waterproof pipe insulation.
g. All installations must be carried out in accordance to the relevant connection methods as shown in the "Condensate installation diagrams" & BS6798:2009
h. Pipe work must be installed so that it does not allow spillage into the dwelling in the event of a blockage (through freezing)
i. All internal burrs should be removed from the pipe work and any fittings.

In order to minimise the risk of freezing during prolonged very cold spells, one of the following methods of terminating condensate drainage pipe should be adopted.

Internal Drain Connections
Wherever possible, the condensate drainage pipe should be routed to drain by gravity to a suitable internal foul water discharge point such as an internal soil and vent stack or kitchen or bathroom waste pipe etc. See Figs 1 and 2.

Condensate Pump
Where gravity discharge to an internal termination is not physically possible or where very long internal pipe runs would be required to reach a suitable discharge point, a condensate pump of a specification recommended by the boiler or pump manufacturer should be used terminating into a suitable internal foul water discharge point such as an internal soil and vent stack or internal kitchen or bathroom waste pipe etc. (fig 3).

External Drain Connections
The use of an externally run condensate drainage pipe should only be considered after exhausting all internal termination options as described previously. An external system must terminate at a suitable foul water discharge point or purpose designed soak away. If an external system is chosen then the following measures must be adopted:

The external pipe run should be kept to a minimum using the most direct and "most vertical" route possible to the discharge point, with no horizontal sections in which condensate might collect.

- For connections to an external soil/vent stack see Fig 4. Insulation measures as described should be used.
- When a rainwater downpipe is used, an air break must be installed between the condensate drainage pipe and the downpipe to avoid reverse flow of rainwater into the boiler should the downpipe become flooded or frozen, see Fig 5.
- Where the condensate drain pipe terminates in a purpose designed soak away (see BS 6798) any above ground condensate drain pipe sections should be run and insulated as described above. See Fig 6.
- Where the condensate drain pipe terminates over an open foul drain or gully, the pipe should terminate below the grating level, but above water level, to minimise "wind chill" at the open end. The use of a drain cover (as used to prevent blockage by leaves) may offer further prevention from wind chill.
- Where the condensate drain pipe terminates in a purpose designed soak away (see BS 6798) any above ground condensate drain pipe sections should be run and insulated as described above. See Fig 6.

Unheated Internal Areas
Internal condensate drain pipes run in unheated areas, e.g. lofts basements and garages, should be treated as external pipe.

Ensure the customer is aware of the effects created by a frozen condensate and is shown where this information can be found in the user manual.

Figure 1 - Connection of Condensate Drainage Pipe to Internal Soil & Vent Stack

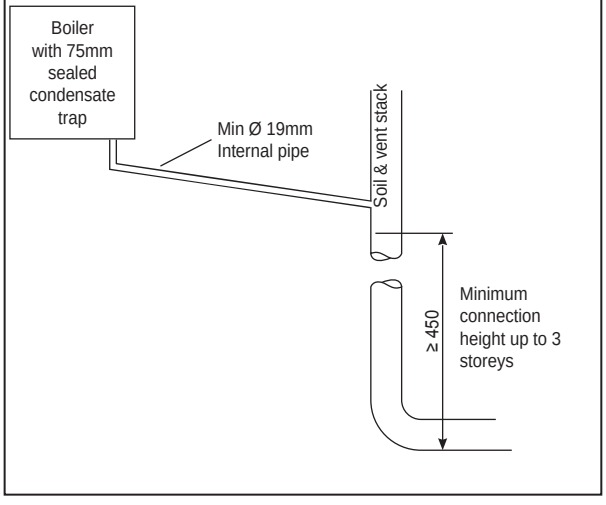

Figure 2 - Connection of a Condensate Drainage Pipe Downstream of a Sink, Basin, Bath or Shower Water Trap to Internal Soil Vent Stack

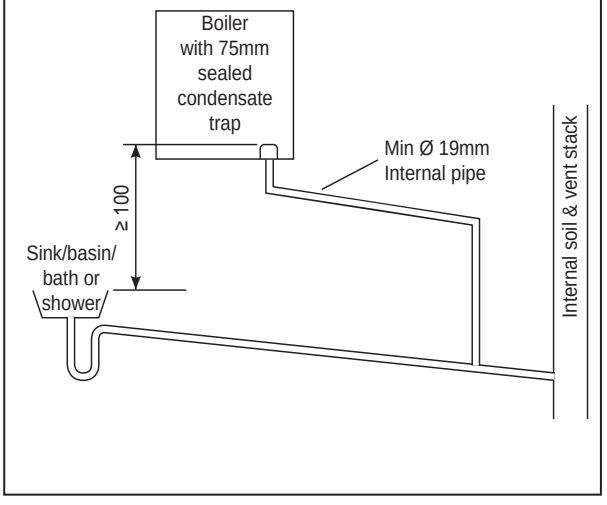

continued . . . . .

18 CONDENSATE DRAIN - CONT'D.....

Figure 3 - Connection of a Condensate Pump Typical Method (see manufacturers detailed instructions)

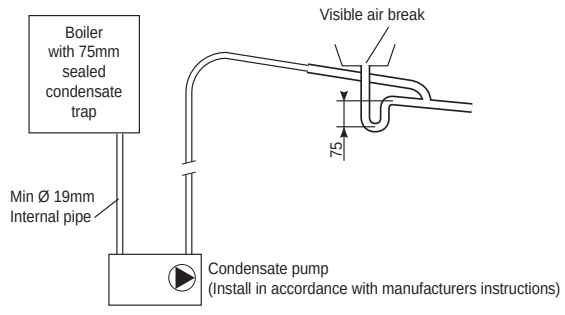

Figure 4 - Connection of condensate Drainage Pipe to External Soil & Vent Stack

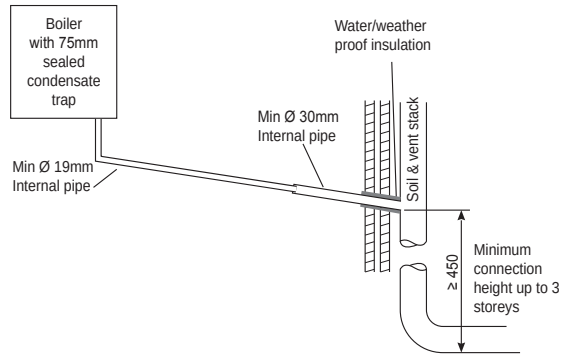

Figure 5 - Connection of a Condensate Drainage Pipe to an External Rainwater Downpipe (only combined foul/rainwater drain)

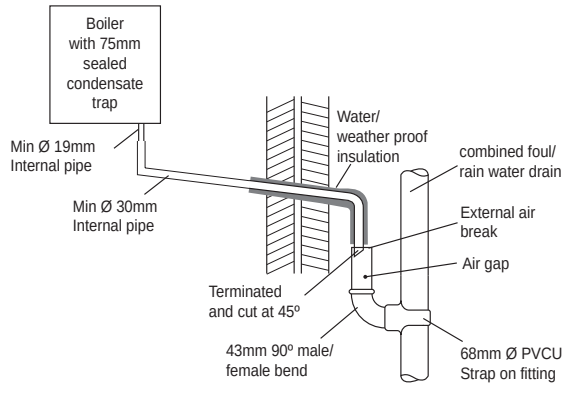

Figure 6 - Connection of a Condensate Drainage Pipe to an External Purpose Made Soak Away.

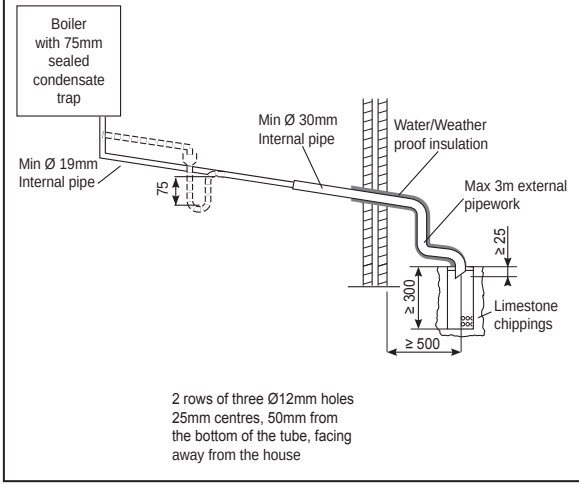

19 DETERMINING THE FLUE LENGTH AND FLUE PACKS REQUIRED

IMPORTANT. The boiler MUST be installed in a vertical position

Dimension X - Wall thickness.
Dimension L - Wall thickness plus boiler spacing.

FLUE KITS

Pack B - supplied as standard.

Finishing Kit - supplied as an optional extra.

Screw Kit - optional kit for mecahnical fixing of flue joints.

Pack D - optional extension kit for side flue or rear flue outlet.

Refer to 'Flue Extension Ducts'.

Total Flue length dimension		Flue
Rear flue dim. X+75	**Side flue dim. L+225**	**Extra packs required**
Up to 775 mm	Up to 775 mm	none
Up to 1680 mm	Up to 1680 mm	Pack D - 1 off
Up to 2585 mm	Up to 2585 mm	Pack D - 2 off
Up to 3490 mm	Up to 3490 mm	Pack D - 3 off
Up to 4395 mm	Up to 4395 mm	Pack D - 4 off
Up to 5300 mm	Up to 5300 mm	Pack D - 5 off
Up to 6000 mm	Up to 6000 mm	Pack D - 6 off

Note. *The flue duct MUST be inclined at 1.5 degrees to the horizontal to allow condensate to drain back into the boiler and out through the condensate drain. (Only necessary if using one or more 'D' extension duct packs)*

Note. ***MAXIMUM FLUE LENGTHS:***

HE15, 18 AND 24 - 6M (HORIZONTAL FLUE)
HE30 AND 36 - 3M (HORIZONTAL FLUE)
HE15, 18 AND 24 - 8M (VERTICAL FLUE)
HE 30 AND 36 - 5M (VERTICAL FLUE)
90° ELBOW KIT (EQUIVALENT FLUE LENGTH RESISTANCE = 1.5M)
45° ELBOW KIT (EQUIVALENT FLUE LENGTH RESISTANCE = 1.0M)

Notes.

1. *It is recommended that a support bracket is fitted for every 1 metre of extension pipe used and a bracket should be used at every joint, to ensure pipes are held at the correct angle.*

   If a slip joint coupling is to be used then a bracket should be used to secure the collar.

2. *Only use water as lubricant during assembly.*

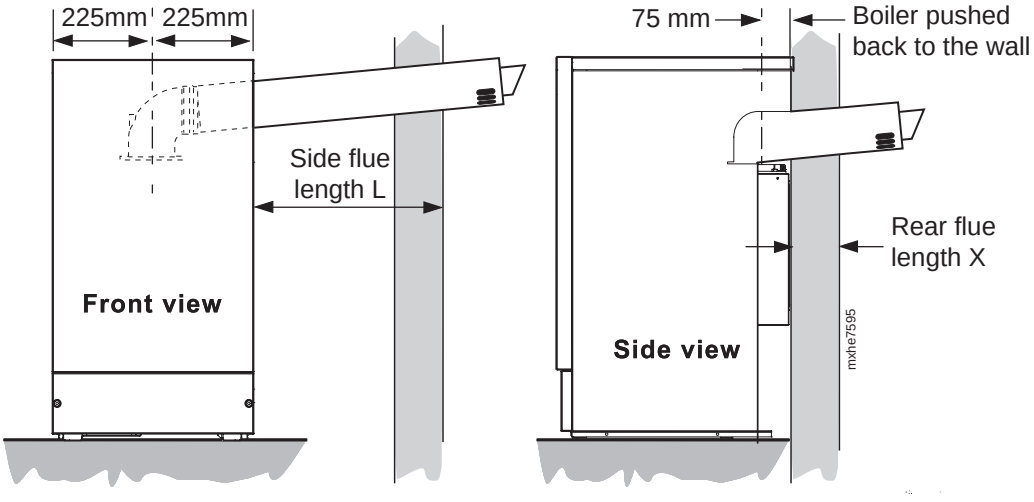

20 FLUE ASSEMBLY - Exploded View

An optional flue duct extension kit is required for wall thicknesses greater than :

Side 545mm (21 1/2")

Rear 705mm (27 3/4")

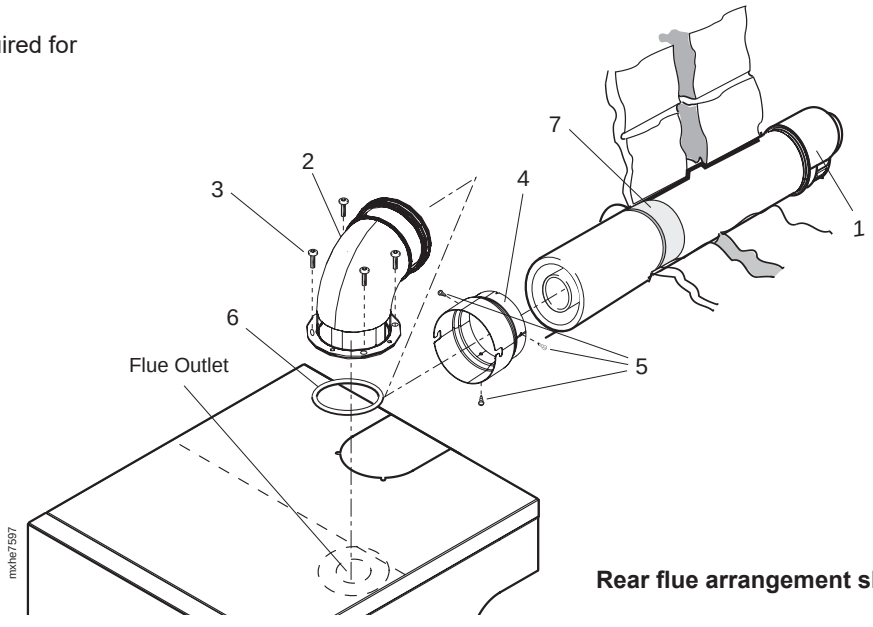

Rear flue arrangement shown

LEGEND

1. Duct assembly
2. Flue turret
3. Turret fixing screws
4. Flue connector
5. Flue connector screws
6. Turret gasket
7. Foam sealing tape

21 MOUNTING THE BOILER ONTO THE PRE-PIPING FRAME

NOTE. ***USE THE BOILER PACKAGING SLEEVE TO PROTECT THE FLOOR.***

1. Remove the two screws retaining the lower front panel and remove the panel

2. Remove the two screws retaining the upper front panel.

3. Lift the upper front panel and remove. If the optional extra concealment panel kit is to be fitted to either left or right hand side panel, it must NOW be fitted (refer to separate instructions provided with kit).

4. At this stage fit the flue assembly and turret (see Frame 28 or 33) and in the case of rear flue fit the optional flue finishing kit, refer to Frame 27, if required. Remove the top panel to facilitate turret fitting.

5. Fit the sealing washers to the water and gas connections.

6. If the condensate pump is to be used, it must now be fitted (If not to be fitted go to No. **7**)

a. Fit the condensate pump fixing slots over the two screw heads. The screws position the pump but cannot be tightened.

b. Prepare to route the condensate pump cable, the mains cable and the remote user controls wiring (if required) up the rear of the boiler and through the grommet to be found at the top left of the boiler.

c. Using the rubber connecting joint, provide a plastic outlet pipe from the pump outlet connection, to a suitable drain point connection taking care to route the pipework such that it will not foul the boiler when fitted. Refer to Frame 18.

d. Make up the inlet plastic pipe connection to the following drawing and fit to the 'S' trap flexible hose connection.

7. Remove the four screws retaining the boiler to the wooden packaging base and using the packaging sleeve to protect the floor, slide the boiler onto the pre-piping frame ensuring the mains cable and the condensate pump cable (if fitted) is routed through the grommet at the top left of the boiler.

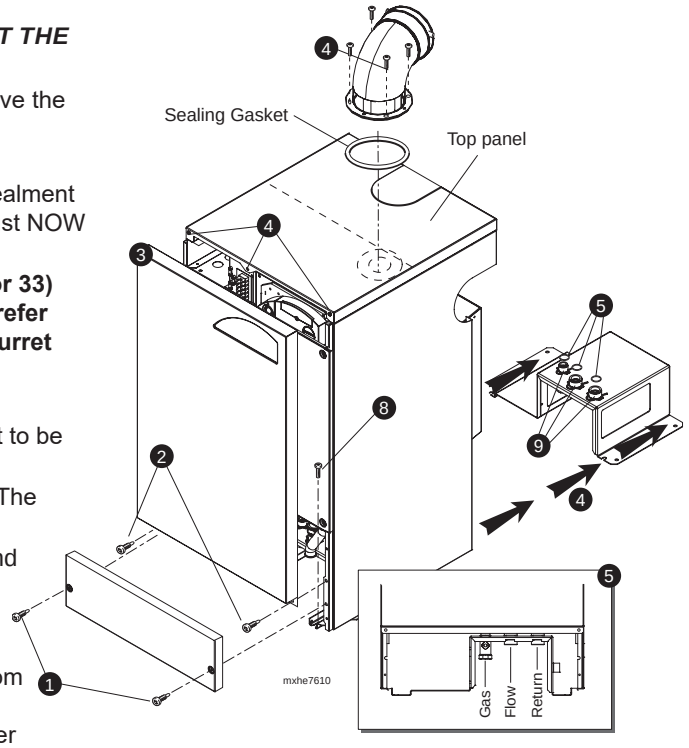

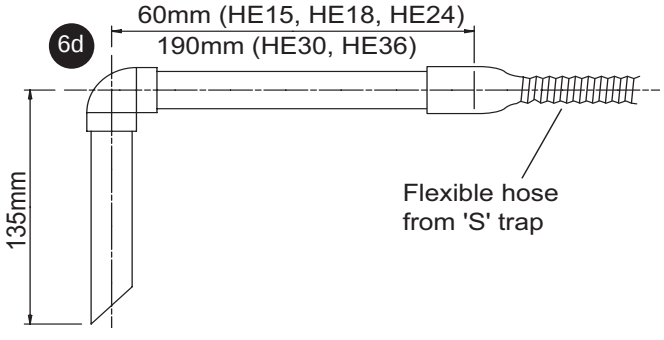

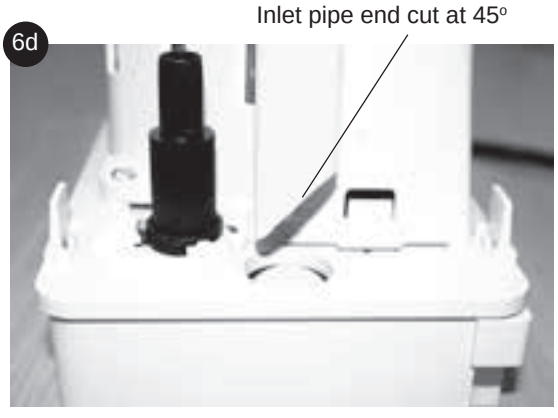



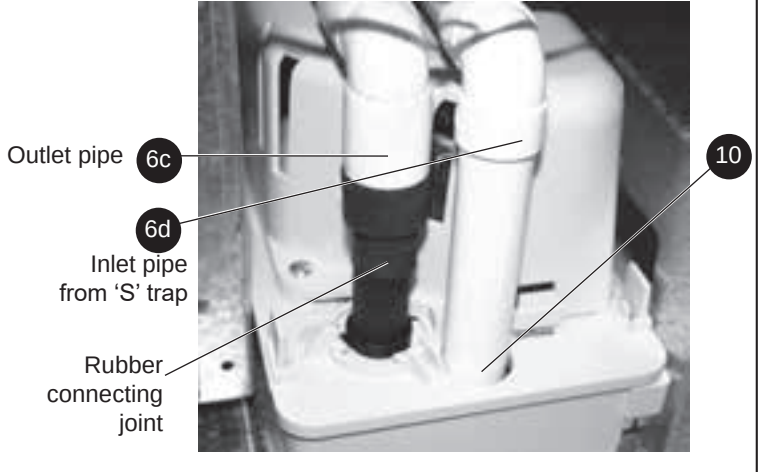

8. Screw the boiler frame to the floor through the 2 slots in the front of the boiler runners.

9. Connect the gas and water union connections ensuring the sealing washers are in place.

10. Connect the condensate pump inlet ensuring the pipe is pushed to bottom of the pump housing. If no pump is fitted connect the S trap flexible hose to the previously installed condensate drain pipe. Refer to Frame 13.

11. Wire the mains connection, the condensate pump connection (if fitted) and the remote user control (if fitted). Refer to Frame 35.

22 CUTTING THE FLUE - REAR Wall thicknesses of 114 to 705mm

Note.

If using the extension ducts go to Frame 24, 25 and 26.

1. Measure and note wall thickness X. Refer to Frame 19.
2. Add 5mm (1/4") to dimension X and, measuring from the ring, cut both outer and inner tube. Ensure support spring clip is in position to facilitate cutting.
3. To ensure the tube is cut square, mark the flue all the way around.
4. De-burr the cut edges.

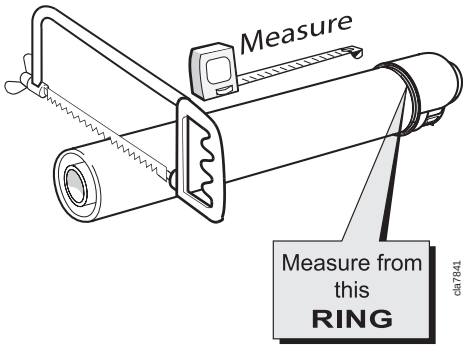

23 CUTTING THE FLUE LH OR TO RH SIDE - Wall thickness of 114 to 545mm

Note. *If using the extension ducts go to Frame 24, 25 and 26.*

1. Measure and note side flue length L. Refer to Frame 19.
2. Add 60mm ($2^3/_8$") to dimension L and measuring from the ring, cut both outer and inner tube. Ensure support spring clip is in position to facilitate cutting.
3. To ensure the tube is cut square, mark the flue all the way around.
4. De-burr the cut edges.

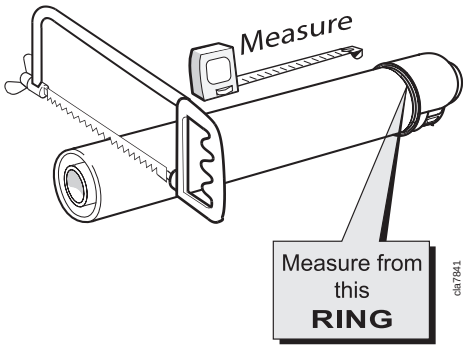

24 FLUE EXTENSION DUCTS - for flue lengths greater than 775mm

Pack D Flue extension duct kit contents

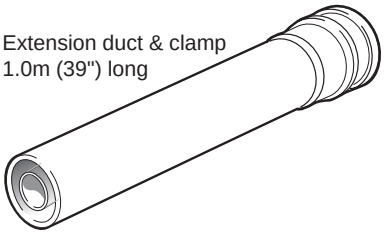

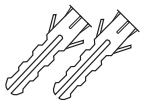
Wall plugs - 2 off


Washers - 2 off

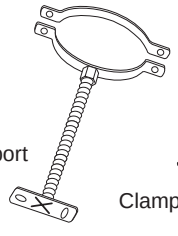
Flue duct support

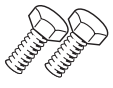
Clamp screws - 2 off


Support fixing screws - 2 off

Note.

Only use water as a lubricant during assembly.

25 FLUE EXTENSION DUCTS - continued

Use a maximum of 6m extended flue ONLY (HE15, HE18, HE24)

Use a maximum of 3m extended flue ONLY (HE30, HE36)

General arrangement

1. A ***maximum*** of 6 extension ducts for the HE15, HE18 and HE24 and a **maximum of 3** extension ducts for the HE30 and HE36 (one suitably cut) plus the standard flue duct may be used together.
2. Flue extensions of greater length than 1m (39") should be supported with the bracket provided, suitably adjusted. Refer to Frame 24.

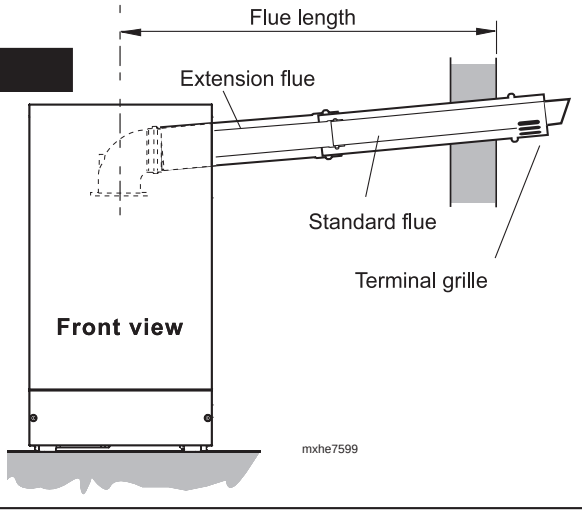

Note. *Side flue shown*

26 FITTING THE KIT

1. Fit the inner flue extension duct onto the inner flue duct.
2. Fit the outer flue extension duct onto the outer air duct.
3. Repeat steps 1 and 2 if a second flue extension is required.
4. Measure and mark the flue length required onto the flue, measuring from the ring near the terminal. (Refer to Frames 19 and 23 for detail of length measurement)
5. To ensure a square cut, mark the flue all the way around.
6. De-burr the cut edges.

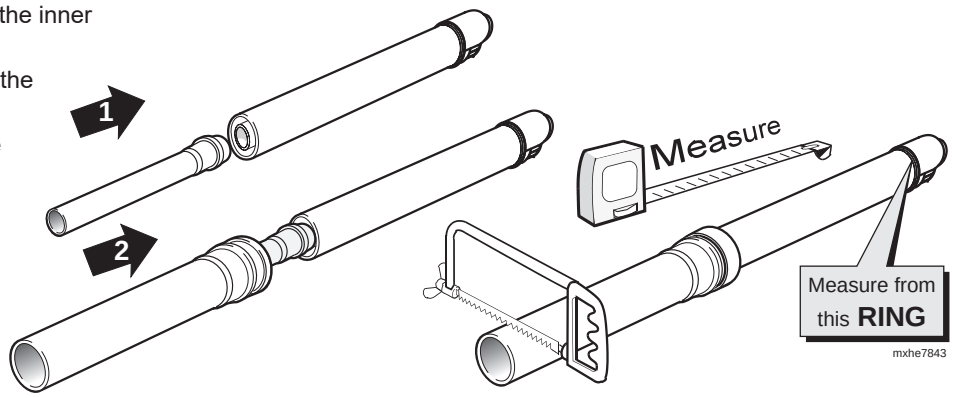

27 FITTING THE OPTIONAL FLUE FINISHING KIT AND OPTIONAL RS SEALING PLATE

Flue Finishing Kit

1. Fit black outer wall seal over terminal and ensure the retaining rim is located in the terminal depression.
2. Fit flue pipe assembly through the hole previously cut in wall.
3. Fit white inner wall seal to pipe assembly (side flue).
4. Fit outer wall sealing plate over outer wall seal and retain with the 4 screws and wall plugs provided.

Contents:

Wall Seal White - 1 off

Wall Seal Black - 1 off

Wall Sealing Plate - 1 off

Screws No. 10x2" - 4 off

Wallplugs - 4 off

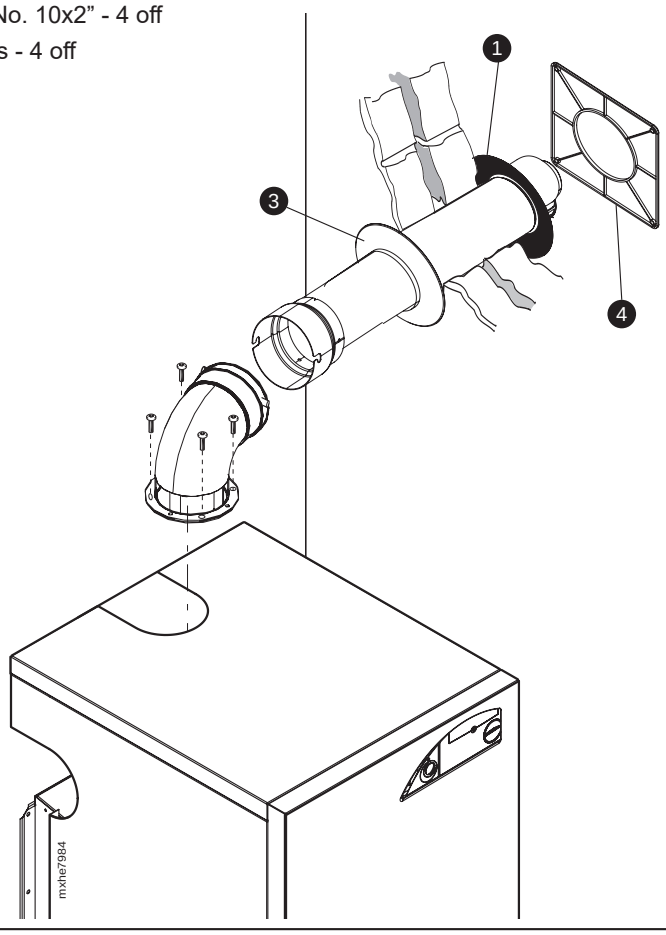

RS Sealing Plate

If the mexico HE is replacing a room sealed appliance, an optional extra terminal wall sealing plate is available to make good the rectangular flue hole.

Contents:

Wall Seal plate - 1 off

Screws No. 10x2" Woodscrew - 4 off

Wallplugs - 4 off

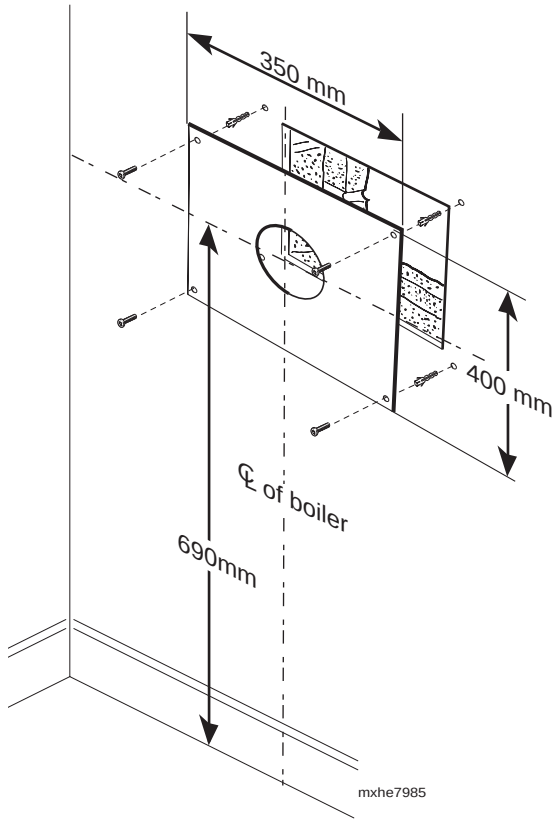

28 CONNECTING THE FLUE TO THE BOILER

1. Measure 68mm from the cut end of the flue assembly and mark a line on the flue.
2. Fit the flue connector over the end of the flue and align the end of the connector with the marked line.
3. Ensure the 'V' cutout on the flue connector is aligned with the top of the turret (use label as a guide).
4. Mark the 3 fixing screw holes and drill the three holes with a 3.2 ($^1/_8$") dia drill. Do not drill through the inner flue pipe.
5. Retain the connector with the 3 screws provided.
6. Adhere the 70mm wide x 20mm deep foam strip (found in the hardware pack box) to the flue assembly tube to provide an inner seal to the hole cut in the wall.
7. Insert the flue assembly through the prepared hole in the wall.
8. Remove the top outlet blanking plate or boiler top panel to facilitate turret fitting. To ensure a positive flue seal is confirmed it may be necessary to remove the worktop or adjacent cupboard to view the joint.
9. Fit the sealing gasket and push the flue turret into the top of the boiler flue sealing ring and retain with the 4 screws provided.
10. **Smear lubricant (to be found in hardware pack)** over both inner flue duct seal and outer air duct seal and locate the flue onto the turret ensuring the 2 bayonet fixings on the flue connector (B) engage to the lugs on the turret (A).
11. Replace the top outlet blanking plate.
12. **Flues over 1 metre long.**

    Fix the flue support bracket to the wall, using the wall plug and wood screw.

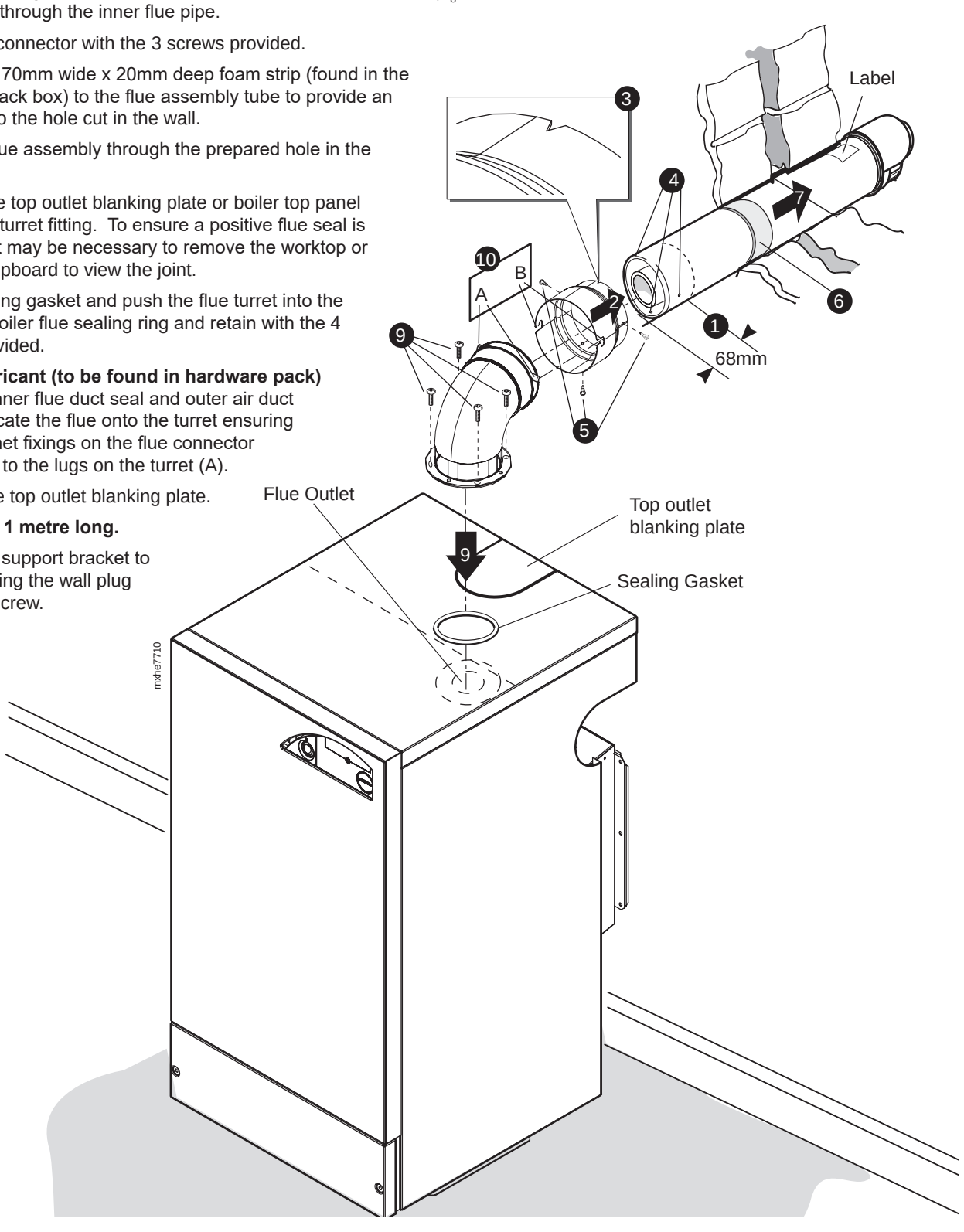

29 FITTING THE OPTIONAL ROOF FLUE KIT (Flat or Pitched)

Note.
A flat or pitched roof flashing plate (not supplied) is required before proceeding with the installation of this kit.

This kit is suitable for both flat and pitched roof terminations, using a concentric flue to run vertically from the top of the boiler and terminating above roof level.

Connection to the top of the boiler is made using a separately supplied vertical connector

WEATHER PROOFING

Where the flue passes through the roof line an adequate seal must be made. This is achieved by using either:

Flat roof weather collar or Universal weather collar.

ACCESSORIES

Flue Duct Extension Kits are available for flue lengths extending beyond 1m. These packs contain 1m extension ducts and may be cut to the desired length.

If the offset vertical option is used an elbow Kit is required. For a full accessories list refer to page 9, Optional Extras.

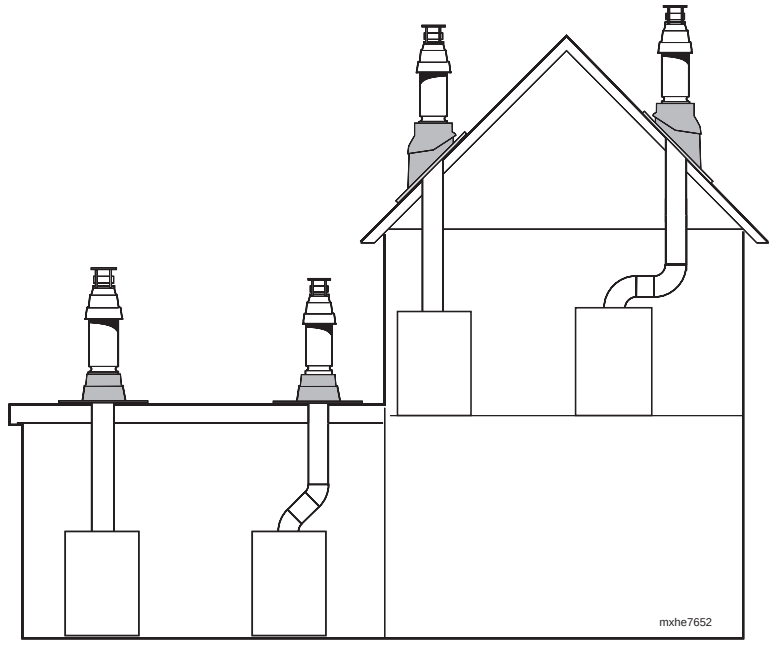

30 ROOF FLUE KIT CONTENTS / OPTIONS

NOTE. ***ITEMS D, E, F, G AND H ARE NOT SUPPLIED WITH THE ROOF FLUE KIT.***

- **A.** Flue assembly with terminal
- **B.** Flue seal collar
- **C.** 3.5x13 screw
- **D.** Pitched roof tile/flat roof tile weather collar
- **E.** Vertical connector (60/100) comes with gasket and fixing screws
- **F.** Roof flue extension duct kit (60/100)
- **G.** 90º elbow kit (60/100)
- **H.** 45º elbow kit (60/100)

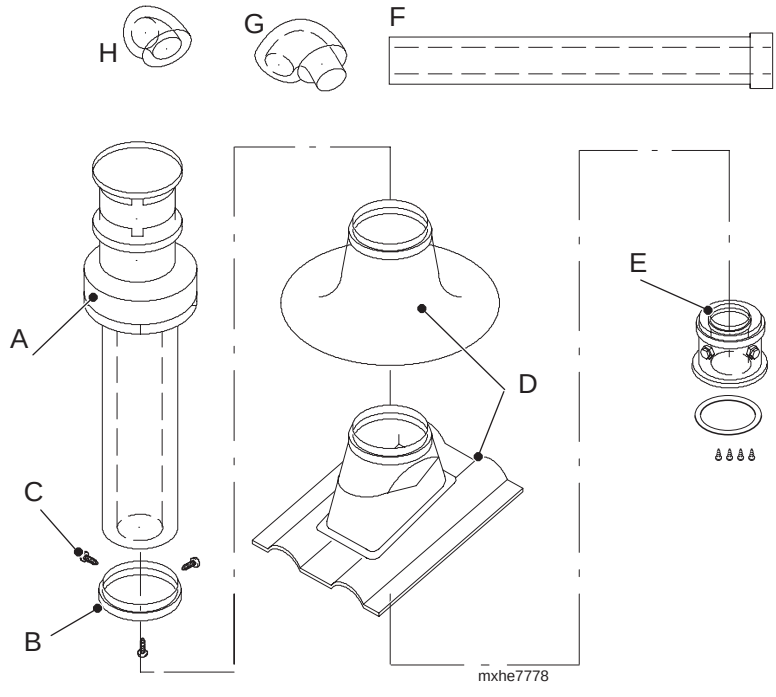

31 FLUE TERMINAL POSITION

The terminal should be positioned so that products of combustion can safely disperse at all times.

Pluming may occur at the termination so, where possible, terminal positions where this could cause a nuisance should be avoided.

Minimum dimensions are shown below

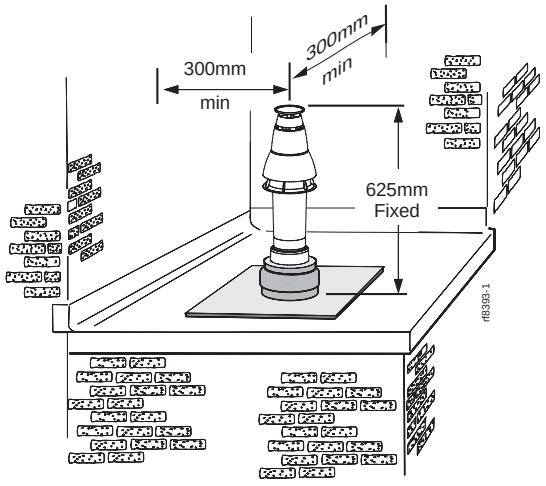

Flat roof - with structure

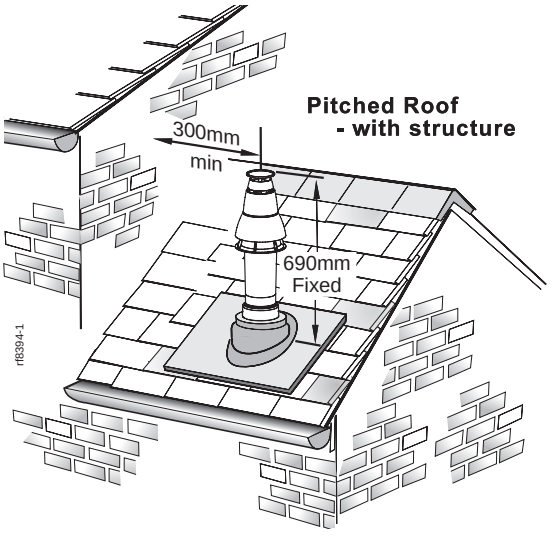

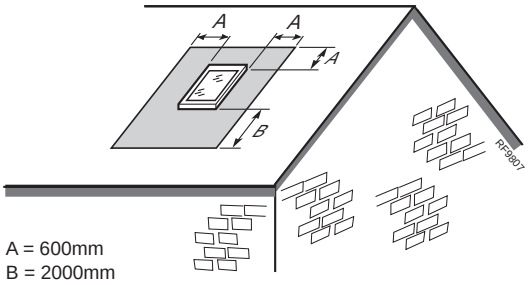

A = 600mm
B = 2000mm

The flue terminal shall not penetrate the shaded area of the roof

Pitched roof - with velux window or opening

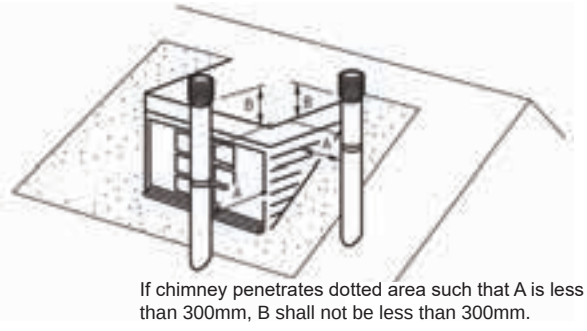

If chimney penetrates dotted area such that A is less than 300mm, B shall not be less than 300mm.

Where two or more vertical fanned draught chimney configurations terminate in close proximity at the same height, they shall be separated by at least 300mm. Where any one vertical outlet is more than 300mm above the other, then they shall be separated by at least 1500mm.

Where any vertical fanned draught chimney configuration outlet is within 2000mm measured horizontally of an opening window, then it shall be at least 300mm above the opening.

Note.

The equivalent flue length resistance of the elbow kits are:

90° elbow kit = 1m

45° elbow kit = 0.6m

32 FLUE ARRANGEMENT

Part No.	Description	60/100 Quantity				
		HE15	HE18	HE24	HE30	HE36
n/a	Maximum Flue Length (m)	8	8	8	5	5
201 180	Flue ext. 60/100	7	7	7	6	6
201 189	Terminal Vertical Roof 60/100	1	1	1	1	1
152 258	Weather Collar Pitched Roof	1	1	1	1	1
152 259	Weather Collar Flat Roof	1	1	1	1	1
201 182	90° Elbow Kit (60/100)	4	4	4	2	2
201 183	45° Elbow Kit (60/100)	4	4	4	2	2
201 869	Vertical Connector	1	1	1	1	1

Note.

The equivalent flue length resistance of the 90° elbow kit (60/100) is 1m and the 45° elbow kit (60/100) is 0.75m.

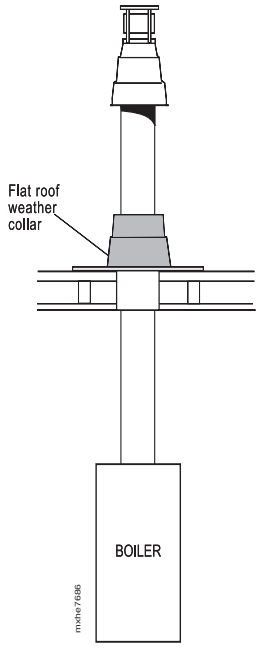

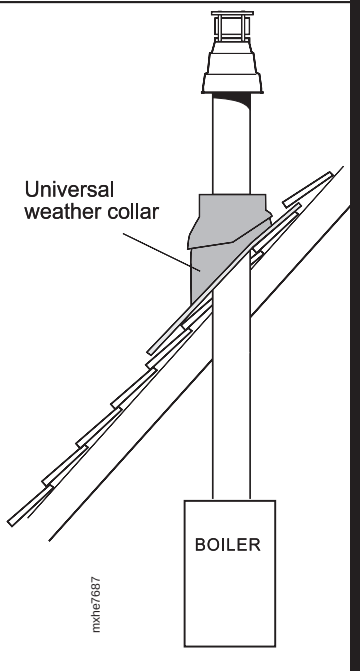

33 ASSEMBLING THE ROOF FLUE KIT

Determine the correct height that the flue should terminate above the roof. If after calculating or measuring the overall flue height from the top of the boiler, it is necessary to cut both pipes of assembly A, then ensure they are cut equally leaving the inner flue tube longer than the outer air tube as supplied. (Refer to No. 5 below)

Ensure the cut pipe ends are free from any burrs.

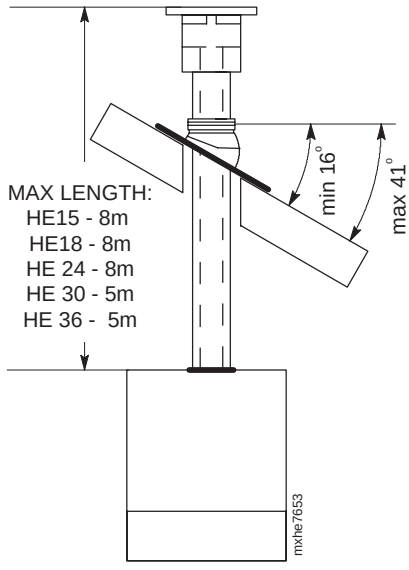

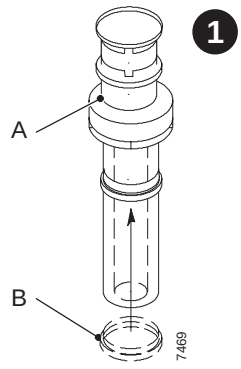

1. Ensure the flue seal collar B is located onto the flue assembly A.

2. Position the roof flashing plate D (supplied separately) over the hole cut in the roof and insert flue assembly A from the roof end.

3. Remove the casing top outlet blanking plate (2 screws) or boiler top panel to facilitate fitting the vertical connector. Fit the sealing gasket and push fit the vertical connector E (supplied separately) into the boiler flue connection and retain with the four securing screws provided.

4. "Push" fit extension duct F (if required, supplied separately) and the roof flue kit assembly into the vertical connector E. Using the lubricant found in the hardware pack to facilitate fitting.

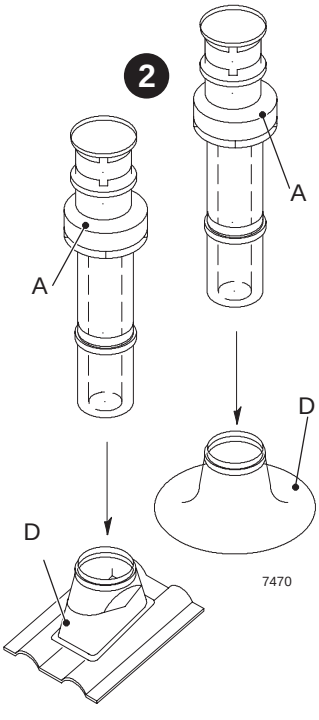

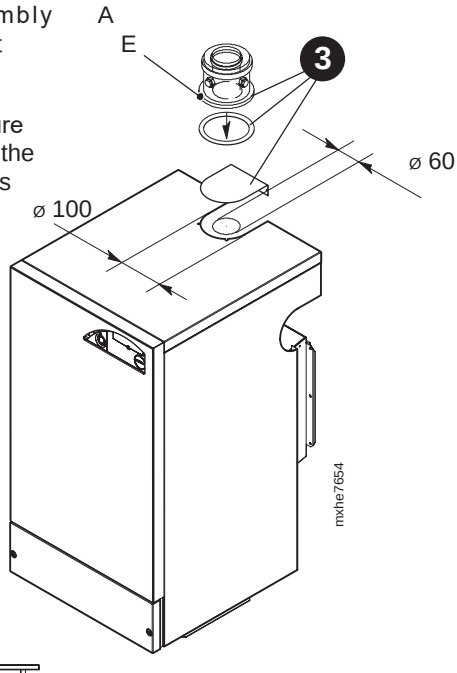

5. If the last extension duct requires cutting, measure the distance (outer ducts) between the duct and the terminal and add 100 mm to this dimension. This gives the length of the last extension duct.

Note. *Check the position of the inner flue duct relative to the outer duct on the assembled extension duct(s) and ensure the terminal flue duct is cut longer than the air duct to ensure engagement in the final flue duct seal.*

6. Slide down and position the flue seal collar B over the roof plate D and secure it with the 3 screws C to the flue assembly A.

7. Finally ensure the roof flashing plate D is correctly sealed to the roof.

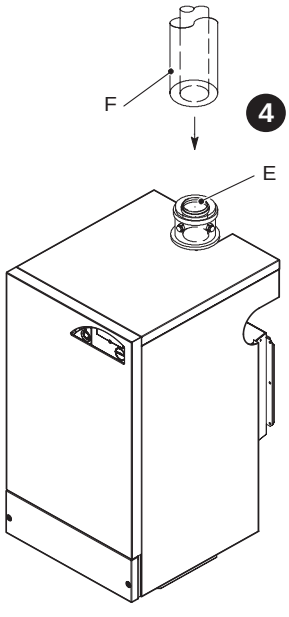

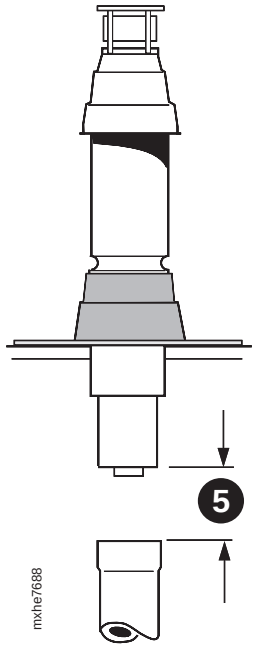

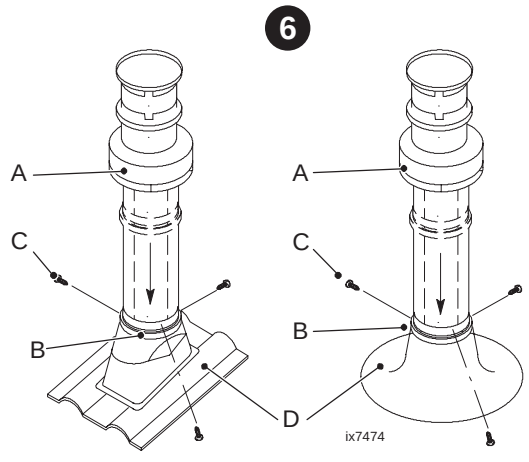

34 ELECTRICAL CONNECTIONS

WARNING. This appliance MUST be earthed.

A mains supply of 230 V ~ 50 Hz is required.

All external controls and wiring MUST be suitable for mains voltage.

The fuse rating should be 3 A.

Wiring external to the boiler MUST be in accordance with the current I.E.E. (BS.7671) Wiring Regulations and any local regulations.

Wiring should be 3 core PVC insulated cable NOT LESS than 0.75 mm^2 (24 x 0.2mm) and to BS. 6500, Table 16.

For IE reference should be made to the current ETCI rules for electrical installations.

Connection must be made in a way that allows complete isolation of the electrical supply - such as a double pole switch having a 3mm (1/8") contact separation in both poles, or a plug and socket serving only the boiler and system controls. The means of isolation must be accessible to the user after installation.

35 INTERNAL WIRING

A pictorial wiring diagram is shown in Frame 40.

1. Route the mains cable via the rear of the boiler through the grommit at the left hand side.
2. Wire the permanent live supply into the 5-way remote plug terminals, L3, N & ⏚.

   IMPORTANT.
   A permanent live is ESSENTIAL in order for the advanced diagnostic controls to function correctly.

   Ensure that the lengths of the live and neutral wires are shorter than the earth wires so that if the cable slips in its anchorage the current carrying wire become taut before the earth wire.
3. Wire any switched live supply into L2 or connect L1 and L2 via external control switching as shown in Frame 39. In either case remove the wire link fitted to L1 to L2.
4. Secure the mains lead with the cable clamp.
5. Connect the mains lead connector. Ensure it is fully located into the socket.

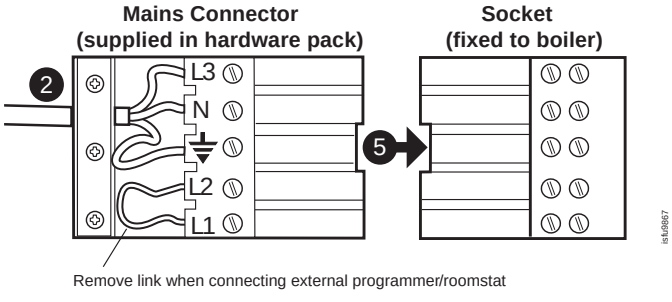

KEY
L3 - Permanent Live
L2 - Switched live input
L1 - Live Feed output

If a condensate pump is to be fitted:

1. Route the cable via the rear of the boiler through the grommit at the left hand side.
2. Remove the condensate pump plug from mating connector.
3. Remove wire link between L1 and L2.
4. Wire in condensate pump as shown below.
5. Secure cable sheath in cable clamps.

Ensure that the lengths of the live and neutral wires are shorter than the earth wires so that if the cable slips in its anchorage the current carrying wire become taut before the earth wire.

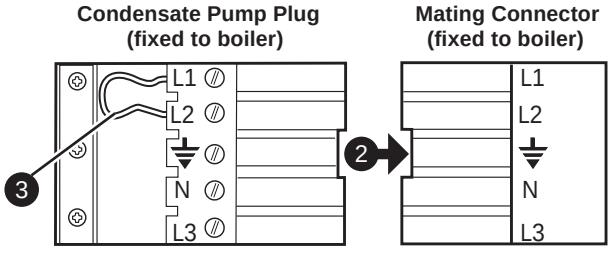

KEY
L3 - Brown
N - Blue
⏚ - Green/Yellow
L2 - Black
L1 - Grey

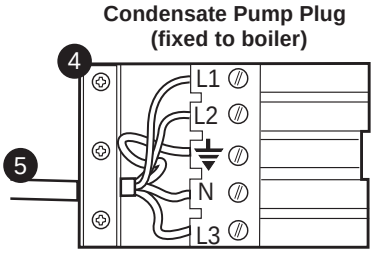

36 PICTORIAL WIRING DIAGRAM

LEGEND
b - blue
bk - black
br - brown
gy - grey
or - orange
pk - pink
r - red
v - violet
w - white
y - yellow
y/g - yellow/green

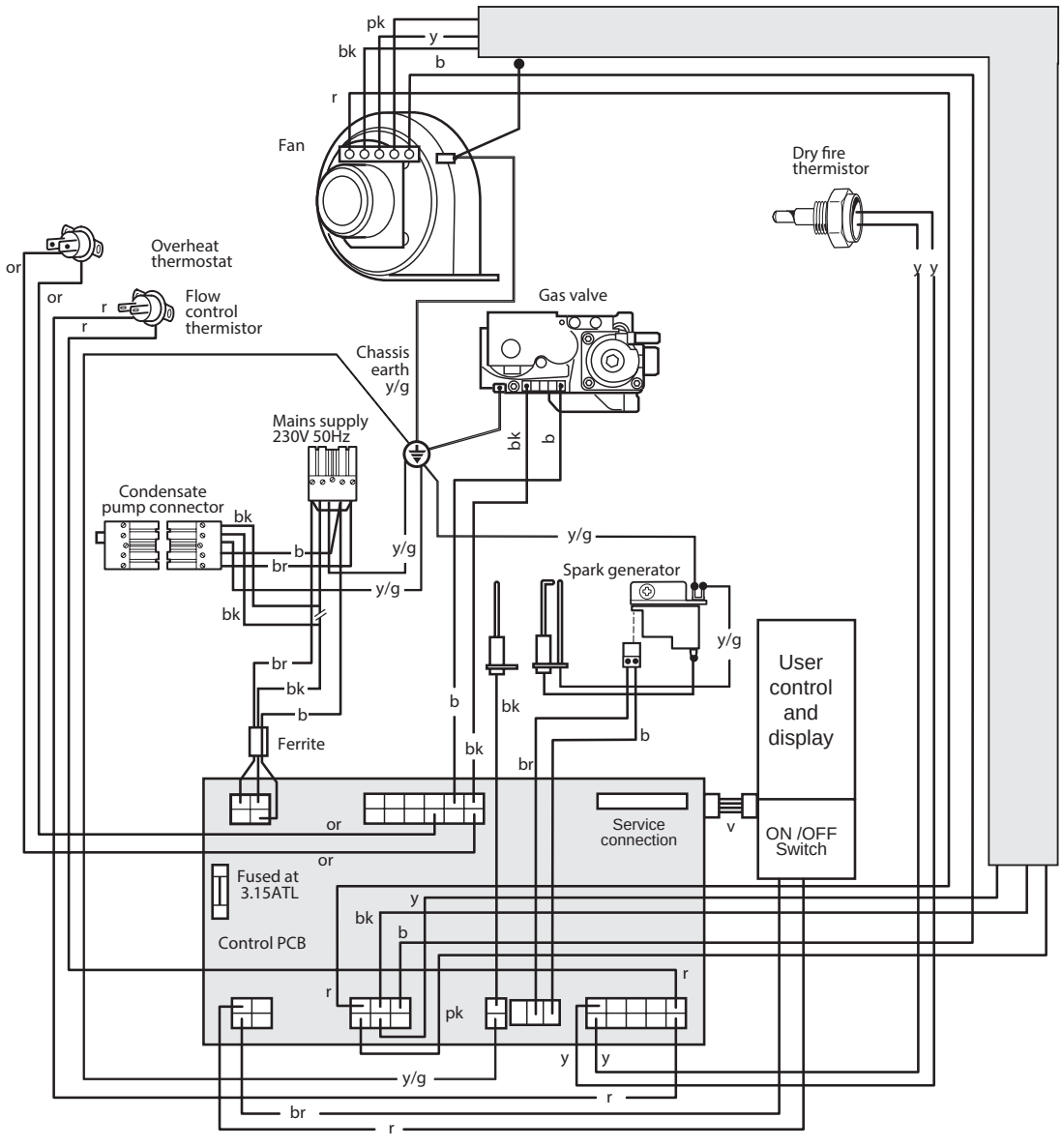

37 FUNCTIONAL FLOW WIRING DIAGRAM

LEGEND
b - blue
bk - black
br - brown
gy - grey
or - orange
pk - pink
r - red
v - violet
w - white
y - yellow
y/g - yellow/green

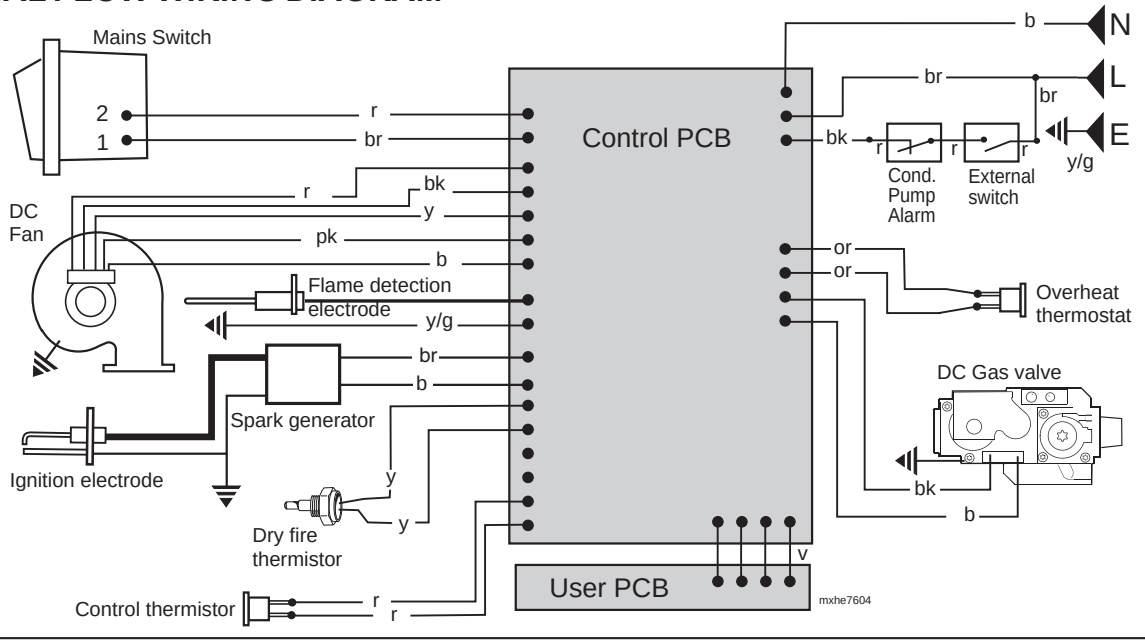

38 EXTERNAL ELECTRICAL CONTROLS

Wiring external to the boiler MUST be in accordance with the current I.E.E. (BS.7671) Wiring Regulations and any local regulations.

For IE reference should be made to the current ETCI rules for electrical installations.

The fuse should be 3A.

Room Thermostat

If the thermostat has a neutral connection use it. (It provides for more energy efficient operation by reducing switching temperature differentials.)

Frost Protection

If parts of the pipework run outside the house or if the boiler will be left off for more than a day or so then a frost thermostat should be wired into the system. This is usually done at the programmer, in which case the programmer selector switches are set to OFF and all other controls MUST be left in the running position.

The frost thermostat should be sited in a cold place but where it can sense heat from the system.

If the boiler is installed in a garage it may be necessary to fit a pipe thermostat, preferably on the return pipework.

Important. Ensure that the frost thermostat is wired so that the system pump and/or external diverter valve is energised, as appropriate.

Designation of the terminals will vary but the programmer and thermostat manufacturers' leaflets will give full details.

Diagram A shows an application to boilers fitted with a room thermostat only.

Diagrams B and C show applications to boilers fitted with alternative time controls.

A

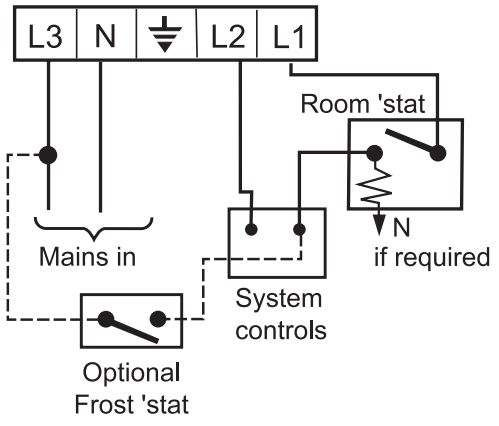

mxhe9221

B

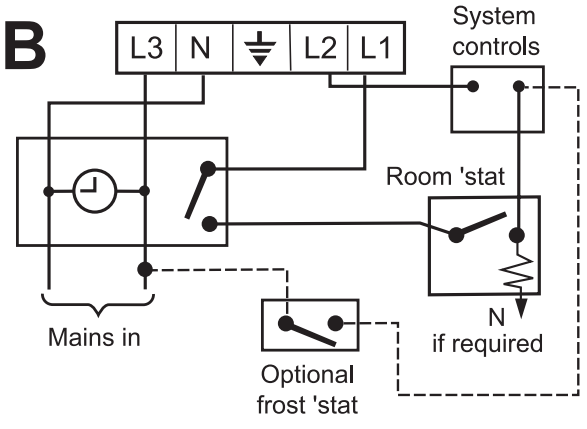

mxhe9222

C

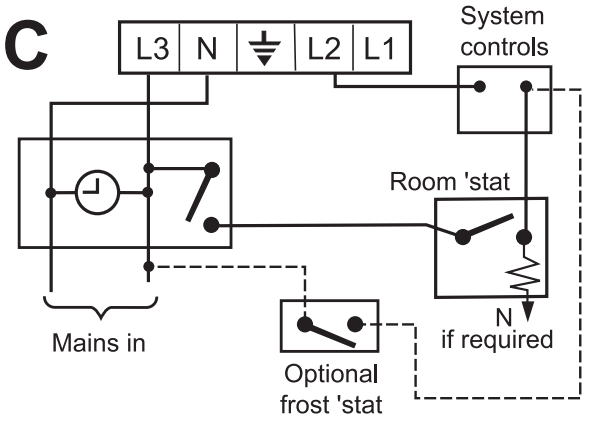

mxhe9223

Earths are not shown for clarity but MUST NEVER BE OMITTED.

39 COMMISSIONING AND TESTING

A. ELECTRICAL INSTALLATION

1. Checks to ensure electrical safety should be carried out by a competent person.
2. ALWAYS carry out the preliminary electrical system checks, i.e. earth continuity, polarity, resistance to earth and short circuit, using a suitable test meter.

B. GAS INSTALLATION

1. The whole of the gas installation, including the meter, should be inspected and tested for soundness and purged in accordance with the recommendations of BS. 6891. In IE refer to I.S. 813:2002.
2. Purge air from the gas installation by the approved methods only.

WARNING. **Whilst effecting the required gas tightness test and purging air from the gas installation, open all windows and doors, extinguish naked lights and DO NOT SMOKE.**

40 INITIAL LIGHTING

PLEASE NOTE: The combustion for this appliance has been checked, adjusted and preset at the factory for operation on the gas type defined on the appliance data plate. Do not adjust the air/gas ratio valve.

having checked:

- That the boiler has been installed in accordance with these instructions.
- The integrity of the flue system and the flue seals.
- The integrity of the boiler combustion circuit and the relevant seals.

1. Check that the system has been filled and that the boiler is not air locked.

Note. *It is important the burner is not operated before the system is fully vented of air. If it is necessary to operate the system pump to assist venting of the air this must be done with the gas service cock turned off.*

2. Check that all drain cocks are closed and any valves in the flow and return are open.

3. Check the electrical supply is off.

4. Check the gas service cock is open.

5. Check that the boiler on/off switch (A) is OFF

6. Slacken the screw in the inlet pressure test point (G) and connect a gas pressure gauge via a flexible tube.

7. Switch the electricity supply ON and check all external controls are calling for heat.

8. Set the boiler thermostat knob (B) to maximum and switch the boiler on/off switch (A) to ON. The boiler control should now go through its ignition sequence until the burner is established.

9. If the boiler does not light after 3 attempts the fault codes *L' 'F'* will be displayed. Press the reset button (C); the boiler will then repeat its ignition sequence. When the burner is established the WHITE burner ON neon (D) will be permanently illuminated.

10. CHECK THE OPERATIONAL (WORKING) GAS INLET PRESSURE

With the boiler operating in the maximum rate condition check that the operational (working) gas pressure at the inlet gas pressure test point (G) complies with the requirements of "Gas Supply" on page 10.

Ensure that this inlet pressure can be obtained with all other gas appliances in the property working.

N.B. The principle of the 1:1 gas valve ensures that the **mexico HE** range is able to deliver their full output at inlet pressures down to 14mb. However if dynamic pressures below 20mb are experienced ensure this is adequate for **ALL** other gas appliances in the property.

IMPORTANT.
The gas input to the burner is regulated by the gas valve according to the air flow produced by the fan. It is NOT user-adjustable. Any interference to sealed settings on the gas valve will adversely affect operation and render our warranty void.

11. Switch OFF the boiler on/off switch.

12. Remove the pressure gauge and tube. Tighten the sealing screw in pressure test point. Ensure a gas tight seal is made.

13. Refit the boiler front panel.

THE DISPLAY

The user control has one neon and one display to inform the user about the status: the display will show the status of the boiler and the neon will show the status of the flame. If no flame is detected the neon is blinking. When the flame is detected the neon will be lit permanently.

Below is a list with display function in normal operation.

0 Standby. No demand for heat present.

C Boiler is active for central heating or domestic hot water.

H Boiler is in lockout for a specific error. The display will be blinking, alternating with a number or letter to show which error is detected.

L Boiler is in lockout for a specific error. The display will be blinking, alternating with a number or letter to show which error is detected.

P Boiler frost protection. Boiler will fire when temperature is less than 3 degrees.

LEGEND

- **A** On/Off switch
- **B** CH Thermostat knob
- **C** Reset button
- **D** Burner On Neon
- **E** Display
- **F** Injector pressure test point
- **G** Inlet pressure test point
- **H** Gas service cock

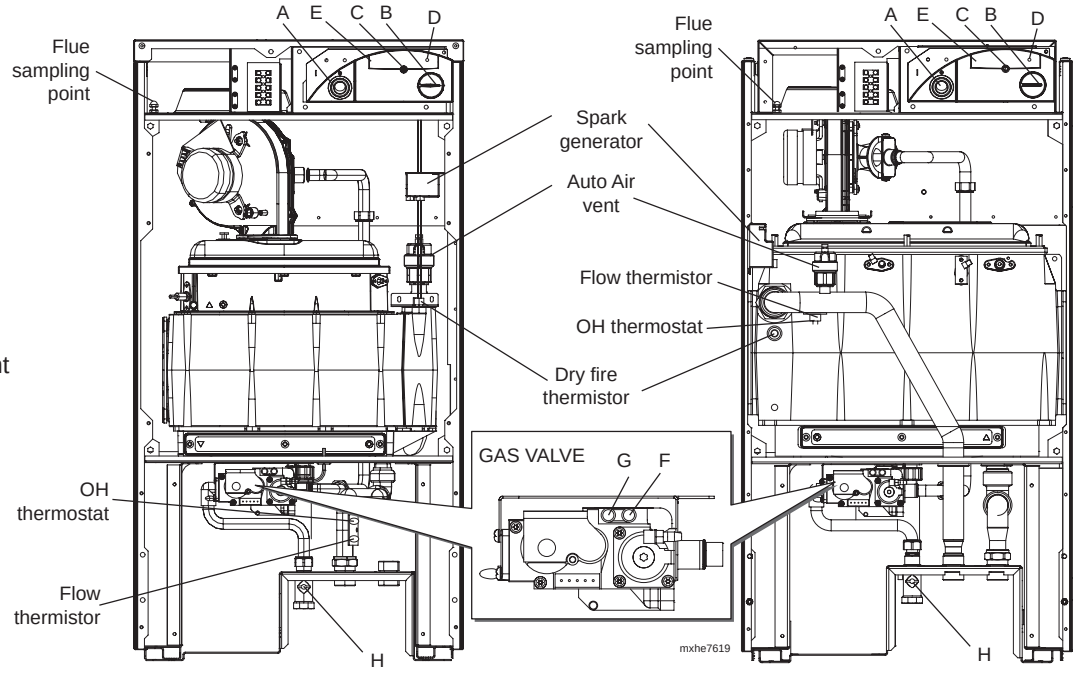

mexico HE15, HE18 & HE24 **mexico HE30 & HE36**

41 GENERAL CHECKS

Make the following checks for correct operation:

1. **Central Heating**
   The correct operation of ANY programmer and all other system controls should be proved. Operate each control separately and check that the main burner or circulating pump, as the case may be, responds.
   Ensure the external controls are calling for heat. After ignition the display should read:
   c ☀ - white neon on
2. **Gas Rate**
   Operate the boiler for 10 minutes. Check the boiler gas rate (see Table 2), ensuring the boiler is at full output whilst measurements are recorded.
3. **Water Circulation System**

Knob Setting	Flow Temperature °C	Flow Temperature °F
Min	30	86
Max	82	180

- The temperatures quoted alongside are approximate, and vary between installations.

Note. *Fernox Superfloc, Sentinel X300 (new systems) / X400 (existing systems) or Salamander products flushing solutions should be used during the flushing procedure. Refer to Frame 9.*

a. With the system HOT examine all water connections for soundness.
b. With the system still HOT, turn off the gas, water and electricity supplies to the boiler and drain down to complete the flushing process.
c. Refill and vent the system, add inhibitor (see Frame 9), clear all air locks and again check for water soundness. Adhere the water treatment warning label, supplied in the hardware pack, in a *prominent position* on the system, to prevent the use of incorrect water treatment additives.
d. Balance the system. Refer to Frame 4.

4. Check the condensate drain for leaks and check that it is discharging correctly
5. Finally set the controls to the user's requirements.

42 HANDING OVER

After completing the installation and commissioning of the system the installer should hand over to the householder by the following actions:

1. Hand the Installation / User's Instructions to the householder and explain his or her responsibilities under current Gas Safety (Installation and Use) Regulations or rules in force.
2. Explain and demonstrate the lighting and shutting down procedures.
3. The operation of the boiler and the use and adjustment of ALL system controls should be fully explained to the householder to ensure the greatest possible fuel economy consistent with household requirements of both heating and hot water consumption.
   Advise the User of the precautions necessary to prevent damage to the system and to the building in the event of the system remaining inoperative during frosty conditions.
4. Explain the function and the use of the boiler heating controls.
5. Explain the function of the boiler fault mode. Emphasise that if a fault is indicated the boiler should be turned off and a Gas Safe Registered Engineer consulted. In IE contact a Registered Gas Installer.
6. Explain and demonstrate the function of time and temperature controls, radiator valves, etc., for the economic use of the system.
7. If any programmer is fitted then draw attention to the Programmer User's Instructions and hand them to the householder.
8. After installation and commissioning please complete the benchmark (THE MARK OF QUALITY FOR THE INSTALLATION, COMMISSIONING AND SERVICING OF DOMESTIC HEATING AND HOT WATER SYSTEMS) Commissioning Checklist before handover to the customer. For IE, its is necessary to complete a "Declaration of Conformity" to indicate compliance to I.S. 813:2002.
9. **IMPORTANT**
   Stress the importance of regular servicing by a Gas Safe Registered Engineer and that a comprehensive service should be carried out AT LEAST ONCE A YEAR. In IE servicing work must be carried out by a Registered Gas Installer.
10. As the installer you may wish to undertake the service contract yourself or alternatively offer to the customer the benefits of the Ideal Care Scheme, details of which are outlined in the household pack supplied with this boiler.

As part of the commissioning process, the combustion of this appliance must be checked and the Benchmark Checklist completed. A flow chart to assist is provided on page 57.

ATTENTION !
IT IS A CONDITION OF THE MANUFACTURERS WARRANTY THAT THE BENCHMARK COMMISSIONING CHECKLIST IS FULLY COMPLETED AND LEFT WITH THE APPLIANCE

43 SERVICING SCHEDULE

For the very latest copy of literature for specification & maintenance practices, visit our website idealheating.com, where you will be able to download the relevant information. N.B. Technical Bulletins are also available on idealheating.com.

To ensure the continued safe and efficient operation of the appliance it is recommended that it is checked at regular intervals and serviced as necessary. The frequency of servicing will depend upon the installation condition and usage but should be carried out annually. It is the law that any service work must be carried out by a GAS Safe Registered Engineer. In IE service work must be carried out by a Registered Gas Installer.

PLEASE NOTE: During routine servicing and after any maintenance or change of part of the combustion circuit, the following must be checked:

- The integrity of the flue system and the flue seals.
- The integrity of the boiler combustion circuit and the relevant seals.
- The operational (working) gas inlet pressure at maximum rate. Refer to Frame 40.
- The gas rate. Refer to Frame 41.
- The combustion performance. Refer to step 3.

1. Light the boiler and carry out a pre-service check, noting any operational faults.

2. Check the gas consumption.

3. Connect a suitable gas analyser to the sampling point on top of the boiler or into the flue terminal, if access is possible. Refer to Frame 46.

For correct boiler operation the CO/CO2 ratio of the flue gas should not be greater than 0.004 ratio. If the combustion reading is greater than the acceptable value AND the integrity of the complete flue system and combustion circuit seals have been verified and the inlet gas press (and gas rate) have been verified, then contact Ideal.

Competence to carry out the check of Combustion Performance

PLEASE NOTE. BS6798: 2009 Specification for Installation and maintenance of Gas Fired boiler of rated input not exceeding 70 kW net advises that:

- The person carrying out a combustion measurement should have been assessed as competent in the use of a flue gas analyser and the interpretation of the results;
- The flue gas analyser used should be one meeting the requirements of BS7927 or BS-EN50379-3 and be calibrated in accordance with the analyser manufacturers' requirements.
- Competence can be demonstrated by satisfactory completion of the CPA1 ACS assessment, which covers the use of electronic portable combustion gas analysers in accordance with BS 7967, parts 1 to 4.

4. Clean the main burner.

5. Clean the heat exchanger and 'S' trap.

6. Check the condition of the combustion chamber insulation. Any cracked or damaged pieces should be replaced (HE15, HE18 and HE24 only).

Ionisation probes are a servicable component and require inspecting annually and replacing if distorted.

7. Check the main injector for blockage or damage.

8. Wherever possible, remove and clean the condensate 'S' trap (refer to Frame 48) and check the drain for blockage.

9. Check that the flue terminal is unobstructed and that the flue system is sealed correctly.

10. If fitted, clean the condensate pump.

The servicing procedures are covered more fully in Frames 46 to 50 and MUST be carried out in sequence.

Note. *In order to carry out either servicing or replacement of components the boiler front panels, and sealing panel must be removed. Refer to Frames 44 and 45.*

WARNING.

Always turn off the gas supply at the gas service cock, and switch off and disconnect the electricity supply to the appliance before servicing.

IMPORTANT.

11. After completing the servicing or exchange of components always ensure all gas valve connections are gas tight with a gas soundness check up to the gas control valve, and carry out functional checks as in paragraphs 2 and 3.

12. When work is complete the sealing panel MUST be correctly refitted, ensuring that a good seal is made.

DO NOT OPERATE THE BOILER IF THE SEALING PANEL IS NOT FITTED.

13. Complete the service section of the Benchmark Commissioning Checklist.

44 BOILER FRONT PANEL REMOVAL

1. Remove the two screws retaining the lower front panel and remove the panel.

2. Remove the two screws retaining the upper front panel.

3. Lift the upper front panel and remove.

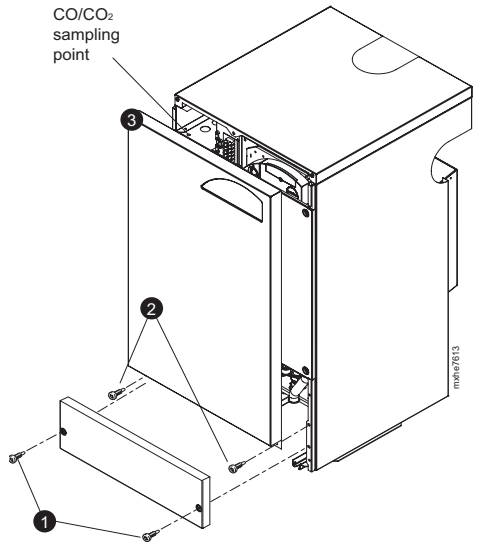

45 BOILER SEALING PANEL REMOVAL

1. To remove the sealing panel remove the 4 screws.
2. Remove the panel.

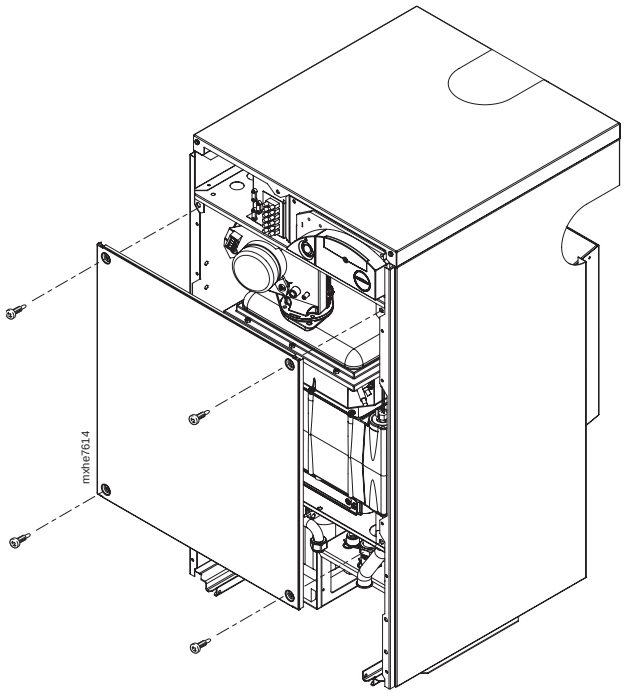

46 FAN AND VENTURI ASSEMBLY REMOVAL AND CLEANING

1. Undo the gas pipe union connection to the injector housing.
2. Undo the screw on the fan mounting bracket.
3. Lift off the fan and venturi assembly.
4. Disconnect the electrical leads from the fan.
5. Inspect the injector for blockage or damage.

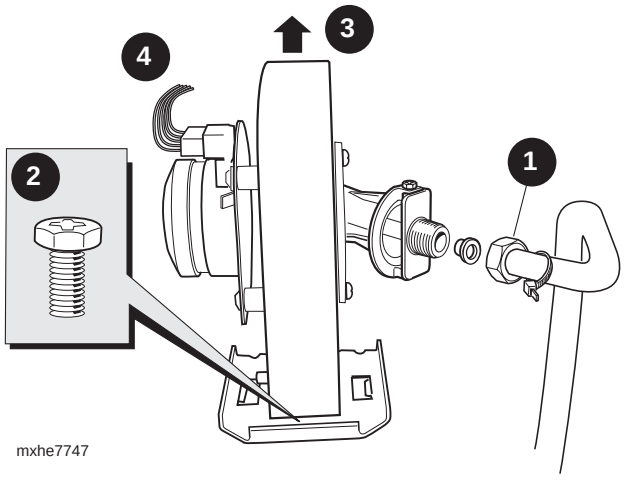

47 BURNER REMOVAL AND CLEANING

1. Remove the 6 fixings securing the burner (the 3 screws at the rear are extended to ease access).
2. Lift off the burner from the combustion chamber.

IMPORTANT

The burner head is a ceramic plaque construction. Care must be taken to ensure that **the burner is not placed down upon its face** as this may cause damage to the ceramic.

3. Brush off any deposits that may be on the ceramic with a SOFT brush.
4. Inspect the sealing gasket around the burner and combustion chamber insulation for any signs of damage. Replace as necessary.

Note.

Take care not to disturb the ionisation probes at the front and rear of the combustion chamber.

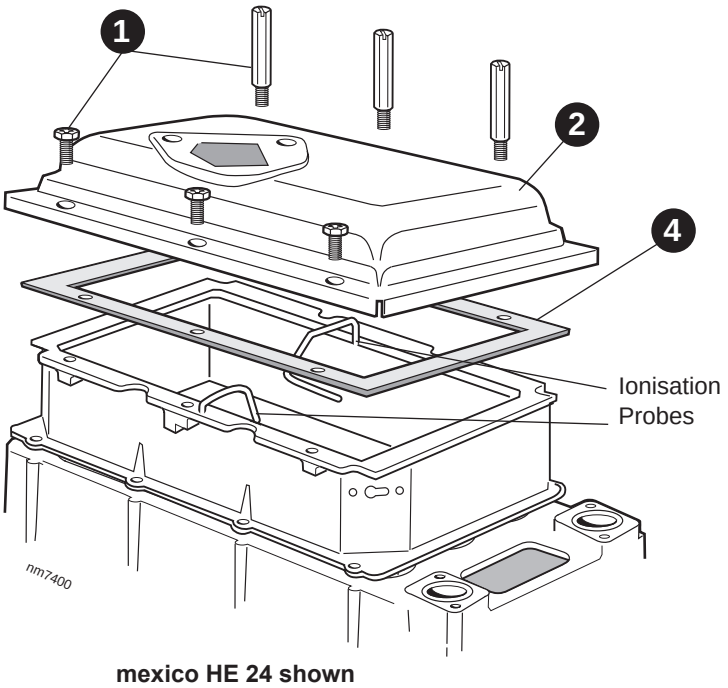

mexico HE 24 shown

48 CLEANING THE CONDENSATE 'S' TRAP & CONDENSATE PUMP (IF FITTED)

If condensate pump fitted refer to separate instructions for cleaning procedure.

1. If a condensate pump is fitted, it must be removed and pulled forward to gain access to the condensate 'S' trap. Refer to Frame 69.

   Note. Care must be taken with residual water when removing the outlet pipe.
2. Remove the plastic union sealing nut on the bottom of the condensate 'S' trap.
3. Remove and clean from the cartridge and ball any residual deposits.
4. Inspect the opaque 'S' trap for further signs of dirt and clean as necessary.
5. Replace the cartridge and ball and replace the plastic sealing nut.
6. Replace the condensate pump.

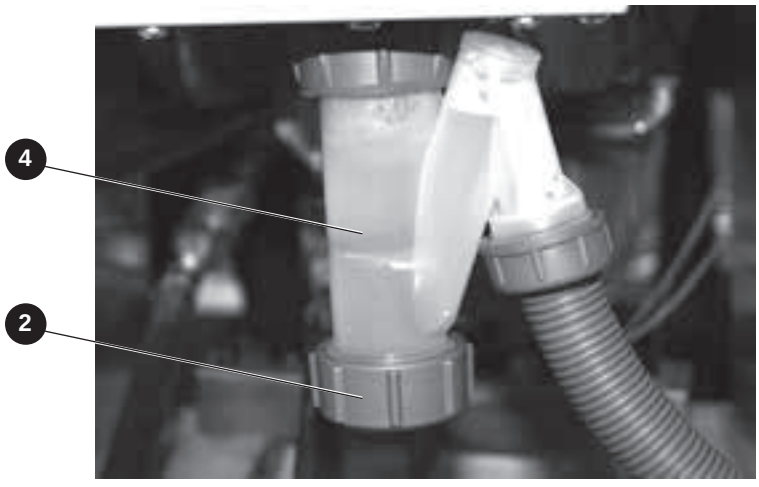

49 CLEANING THE HEAT EXCHANGER

1. Remove ignition and flame detection electrodes. Refer to Frames 55 and 56.
2. Remove the 3 screws retaining the sump cover and remove.
3. Using a suitable tool clean the exposed heat exchanger fins through the sump cover. Also vacuum any debris from the top of the heat exchanger.
4. Remove any loose deposits from the sump.
5. Inspect the ignition and detection electrodes. Ensure that they are clean and in good condition - replace if necessary.
6. Check the condition of the combustion chamber insulation (HE15, 18 and 24 only). Any cracked or damaged pieces must be replaced.

Note. *Take care not to disturb the ionisation probes at the front and rear of the combustion chamber.*

7. Check that the ignition and detection gaps are correct. Refer to Frames 55 and 56.

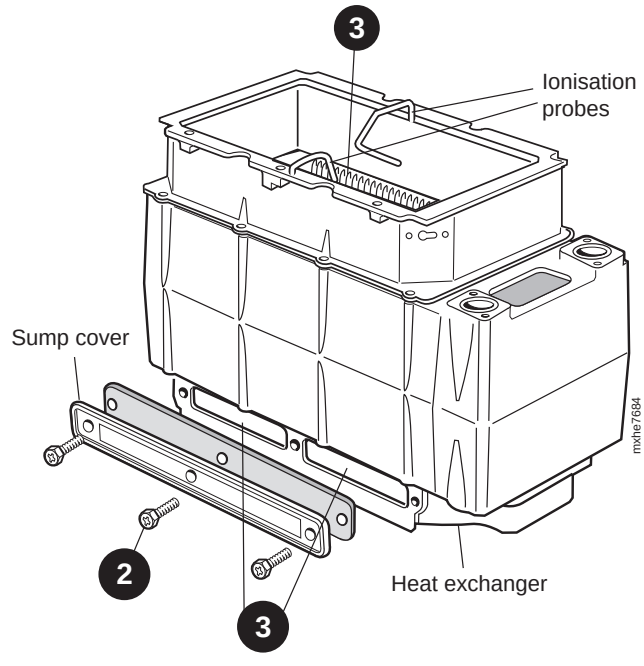

mexico HE24 shown

50 REASSEMBLY

Reassemble the boiler in the following order.

1. Refit the sump cover plate.
2. Refit the electrodes (check dimensions Frames 55 and 56).
3. Refit the burner.
4. Refit the fan / venturi assembly.
5. Reconnect the fan electrical leads.
6. Refit the boiler sealing panel.

IMPORTANT.

Ensure the boiler sealing panel is correctly fitted and that a good seal is made.

7. Refit the boiler front panels.
8. Turn on the gas supply at the gas service cock.
9. Reconnect the electrical supply.

51 REPLACEMENT OF COMPONENTS

GENERAL

When replacing ANY component:

1. Isolate the electricity supply.
2. Turn off the gas supply.
3. Remove the boiler front panels and inner sealing panel. Refer to Frames 44 and 45.

After replacing ANY component check operation of the boiler including gas tightness, gas rate and combustion test.

IMPORTANT

Ensure all gas valve connections are gas tight with a gas soundness check up to the gas control valve.

When work is complete, the sealing panel must be correctly fitted, ensuring that a good seal is made.

Note.

In order to assist fault finding, the control panel has an LED diagnostic display. The key to boiler fault conditions is shown in Frame 70.

THE BOILER MUST NOT BE OPERATED WITHOUT THE SEALING PANEL FITTED

52 FLOW THERMISTOR REPLACEMENT

1. Refer to Frame 51.
2. Remove the boiler front panels and inner sealing panel. Refer to Frames 44 and 45.

   Note. *Only the boiler front panels need removing on the HE15, 18 and 24 models)*
3. Pull the electrical leads off the flow thermistor and remove earth connection.
4. Remove the two screws retaining the flow thermistor.
5. Replace flow thermistor retaining with the fixing screws previously removed and reconnect leads.
6. Reassemble the boiler in reverse order.
7. Check the operation of the boiler. Refer to Frame 51.

mexico HE15, HE18 & HE24

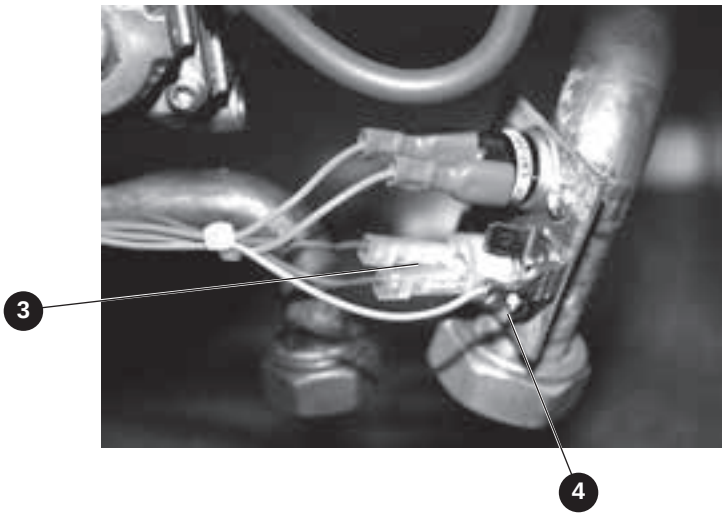

mexico HE30 & HE36

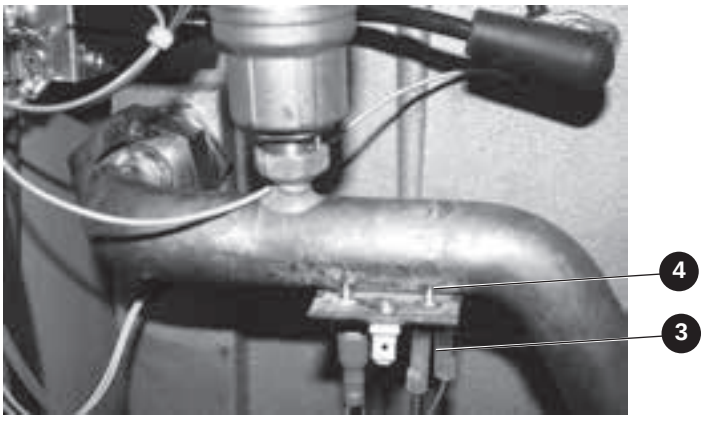

53 FAN REPLACEMENT

1. Refer to Frame 51.
2. Remove the boiler front panels and inner sealing panel. Refer to Frames 44 and 45.
3. Unscrew the gas pipe union connection to the injector housing.
4. Unscrew and remove the screw retaining the fan mounting bracket.
5. Remove the fan and venturi assembly.
6. Disconnect the electrical leads from the fan.
7. Remove the 3 screws and remove the venturi assembly, *noting the orientation of the venturi in relation to the fan body.*
8. Transfer the venturi assembly to the new fan, replacing the gasket if evidence of damage or deterioration is visible.
9. Fit the new fan / venturi assembly.
10. Reassemble the boiler in reverse order, taking care not to over tighten the screw on the fan mounting bracket.
11. Check the operation of the boiler. Refer to Frame 51.

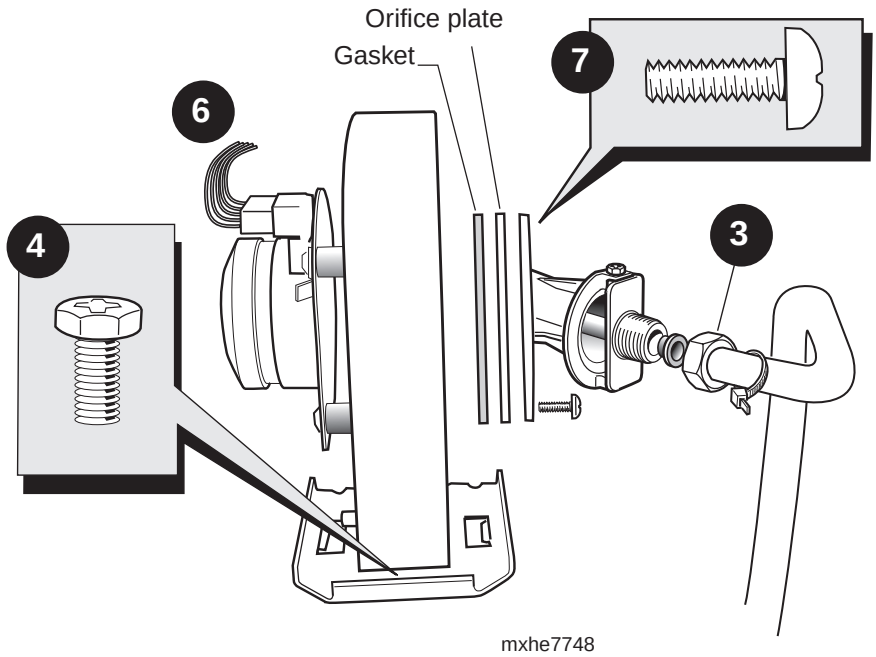

54 BURNER REPLACEMENT

1. Refer to Frame 51.
2. Remove the boiler front panels and inner sealing panel. Refer to Frames 44 and 45.
3. Remove the fan assembly. Refer to Frame 53 (no's 3 to 6.)
4. Remove the 6 fixings securing the burner (the 3 screws at the rear are extended to ease access).
5. Lift off the burner from the combustion chamber.
6. Fit the new burner, replacing any damaged or deteriorating sealing gasket.
7. Reassemble in reverse order.
8. Check the operation of the boiler. Refer to Frame 51.

Note. *Take care not to disturb the burner ionisation probes at the front and rear of the combustion chamber. (burner earth pins are at the front only on the HE30 and HE36)*

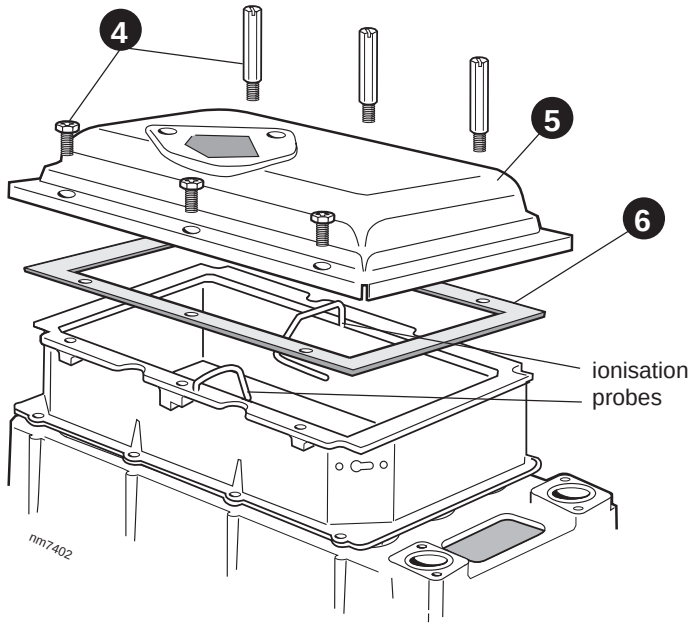

HE24 shown

55 IGNITION ELECTRODE REPLACEMENT

1. Refer to Frame 51.
2. Remove the boiler front panels and inner sealing panel. Refer to Frames 44 and 45.
3. Unplug the ignition lead from the electrode.
4. Remove the burner. Refer to Frame 54.
5. Remove the earth lead from the ignition electrode.
6. Remove the remaining screw holding the ignition electrode to the combustion chamber.
7. Remove the electrode.
8. Fit the new ignition electrode, using the new gasket supplied. Check dimensions as shown.
9. Reassemble in reverse order and check that no damage to the combustion chamber insulation has occurred during the electrode replacement. (HE15, HE18 and HE24 only)
10. Check operation of the boiler. Refer to Frame 51.

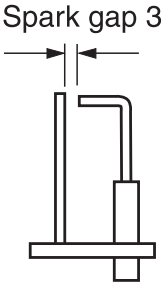

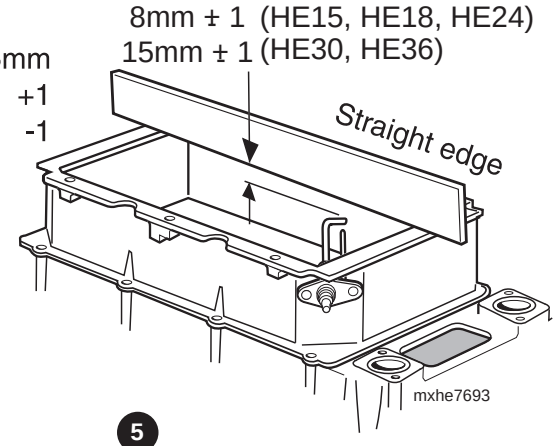

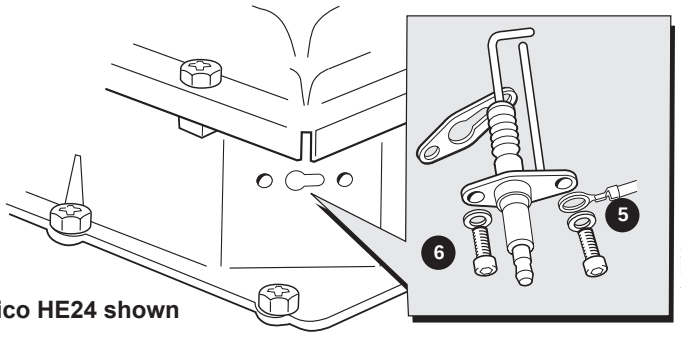

mexico HE24 shown

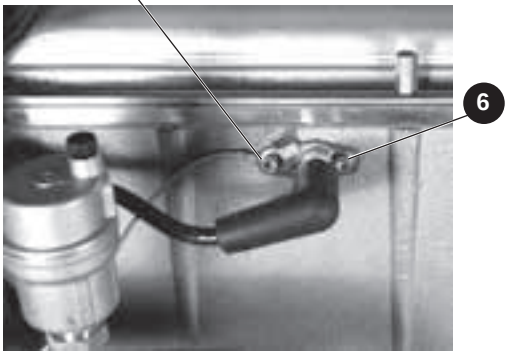

mexico HE30 and HE36 shown

56 FLAME DETECTION ELECTRODE REPLACEMENT

1. Refer to Frame 51.
2. Remove the boiler front panels and inner sealing panel. Refer to Frames 44 and 45.
3. Unplug the flame detection lead from the electrode.
4. Remove the burner. Refer to Frame 54.
5. Remove the 2 screws holding the flame detection electrode to the combustion chamber.
6. Remove the flame detection electrode.
7. Fit the new flame detection electrode, using the new gasket supplied. Check dimension as shown.
8. Reassemble in reverse order and check that no damage to the combustion chamber insulation has occurred during the electrode replacement. (HE15, HE18 and HE24 only).
9. Check operation of the boiler. Refer to Frame 51.

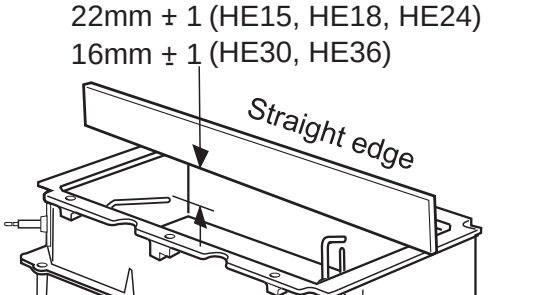

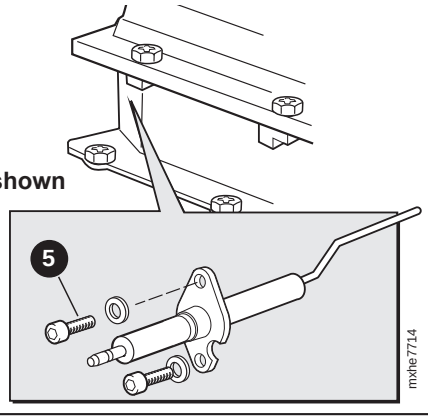

mexico HE24 shown

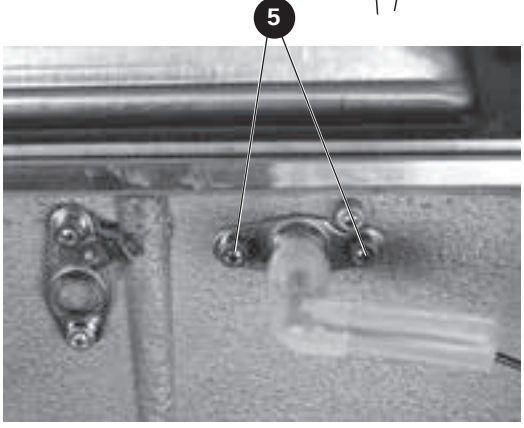

mexico HE30 and HE36 shown

57 SPARK GENERATOR REPLACEMENT

1. Refer to Frame 51.
2. Remove the boiler front panels and inner sealing panel. Refer to Frames 44 and 45.
3. Disconnect the leads from the spark generator and bracket.
4. Remove the 2 M4 screws securing the spark generator to the bracket.
5. Fit the new spark generator and re-assemble in reverse order.
6. Check operation of the boiler. Refer to Frame 51.

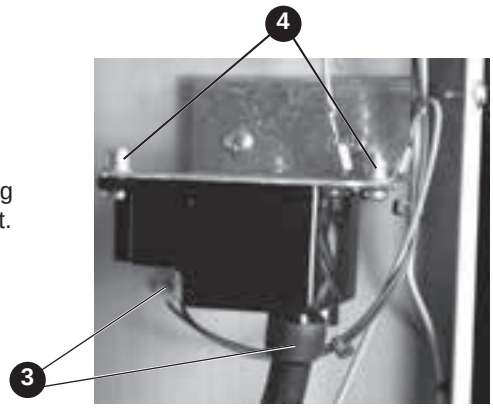

mexico HE15, HE18 and HE24

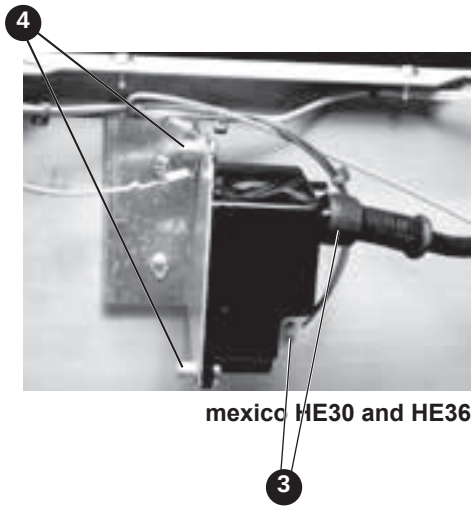

mexico HE30 and HE36

58 BURNER INJECTOR REPLACEMENT

1. Refer to Frame 51.
2. Remove the boiler front panels and inner sealing panel. Refer to Frames 44 and 45.
3. Remove the fan / venturi assembly. Refer to Frame 53.
4. Remove the 2 injector housing screws.
6. Withdraw the injector housing.
7. Fit the new injector housing, complete with injector.
8. Reassemble in reverse order, ensuring that the new gas seal supplied is located correctly in the injector housing.
9. Check operation of the boiler. Refer to Frame 51.

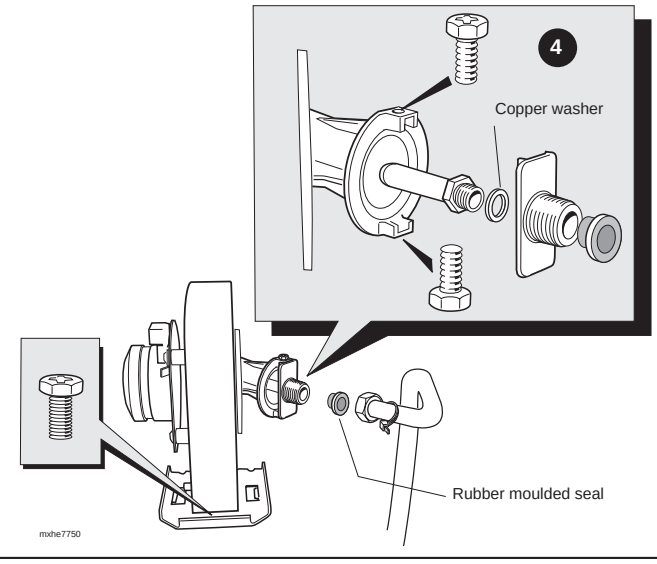

59 GAS CONTROL VALVE REPLACEMENT

1. Refer to Frame 51.
2. Remove the boiler front panels and inner sealing panel. Refer to Frames 44 and 45.
3. Unplug the electrical lead from the gas control valve and disconnect the earth wire.
4. Undo the sensing tube connection at the gas control valve.
5. Undo the union nut at the gas valve pre-piping frame connection.
6. Undo the union nut on the outlet side of the gas control valve and remove valve.
7. Undo the 4 gas valve bracket screws, bracket and gas inlet pipe and remove.
8. Remove the valve bracket fixing screw.
9. Transfer the mounting bracket and gas inlet pipe to the new gas control valve.
10. Fit new gas control valve, ensuring that any seals showing damage or deterioration are replaced.
11. Reassemble in reverse order.
12. Ensure the sensing tubing is correctly replaced.
13. Ensure all gas valve connections are gas tight with a gas soundness check up to the gas control valve.
14. Check operation of the boiler. Refer to Frame 51.

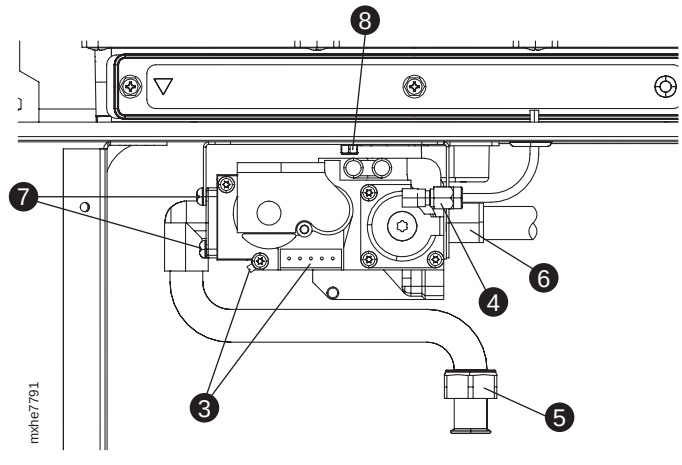

60 CONTROL BOX REPLACEMENT

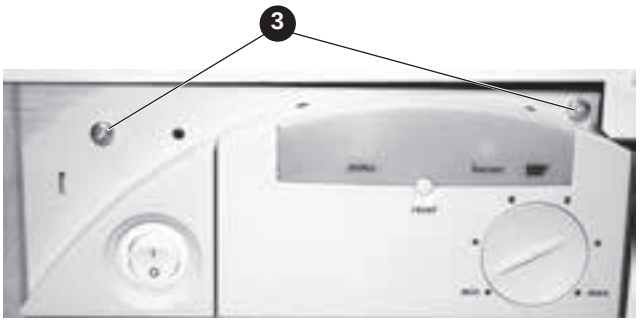

1. Refer to Frame 51.
2. Remove the boiler upper front panel. Refer to Frame 44.
3. Remove the 2 control box mounting bracket screws.
4. Pull the control box forward. Carefully unplug all the electrical wiring from the control box.
5. To remove the user control from the assembly pull the control forward to disconnect the plug.
6. Transfer the mounting brackets to the new control box.
7. Reassemble in reverse order.
8. Check operation of the boiler. Refer to Frame 51.

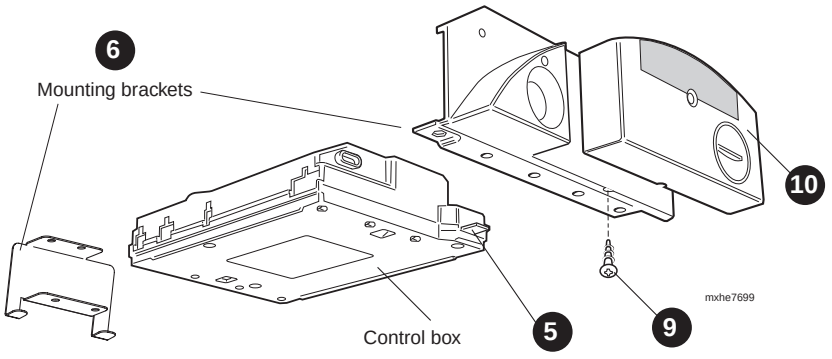

N.B. To change the user control only.

9. Loosen the screw on the underside of the user control.
10. Pull the display unit forward to remove.
11. Push the new display unit into position.
12. Reassemble in reverse order.
13. Check the operation of the boiler. Refer to Frame 51.

61 WIRING HARNESS REPLACEMENT

A pictorial wiring diagram is shown in Frame 36.

1. Refer to frame 51
2. Remove the boiler upper front panel. Refer to frame 44
3. Remove the sealing panel. Refer to frame 45
4. Disconnect the wiring harness from the Fan, Controls Box, Flow Thermistor, Spark Generator, Gas Valve, Overheat Thermistor, Dry Fire Thermistor, and Earth post.
5. Remove the condensate pump terminal strip securing screw to gain access to the back of the terminal strips.
6. With an Allan key remove the 'rivscrew' from the back of the brackets to release the terminal block.
7. Reassemble the new harness to the brackets in reverse order.

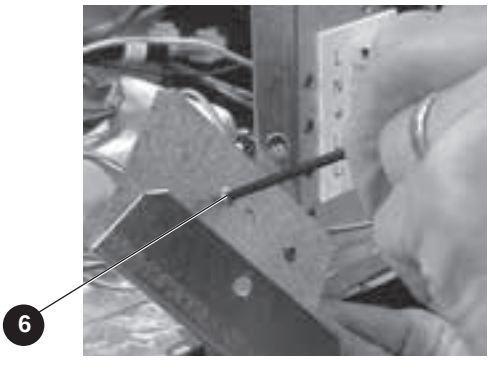

62 MAINS SWITCH REPLACEMENT

1. Refer to Frame 51.
2. Remove the boiler upper front panel. Refer to Frame 44.
3. Remove the screws retaining the user control. Refer to Frame 60, No. 3.
4. Push out the mains switch from the rear, as shown.
5. Refit the new switch, ensuring that the electrical leads are replaced on the correct terminals and the key on the switch is correctly aligned with the slot in the plastic moulding.
6. Reassemble in reverse order.
7. Check operation of the boiler. Refer to Frame 51.

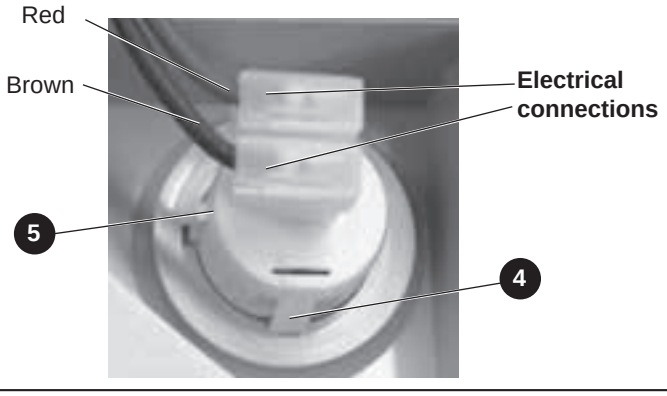

63 OVERHEAT THERMOSTAT REPLACEMENT

1. Refer to Frame 51.
2. Remove the boiler front panels and inner sealing panel (HE30 and HE36 only). Refer to Frames 44 and 45.
3. Pull off the 2 electrical leads from the thermostat body.
4. Remove the 2 screws retaining the O/H thermostat.
5. Fit the new thermostat, and reconnect leads
6. Reassemble in reverse order.
7. Check operation of the boiler. Refer to Frame 51.

mexico HE15, HE18 & HE24

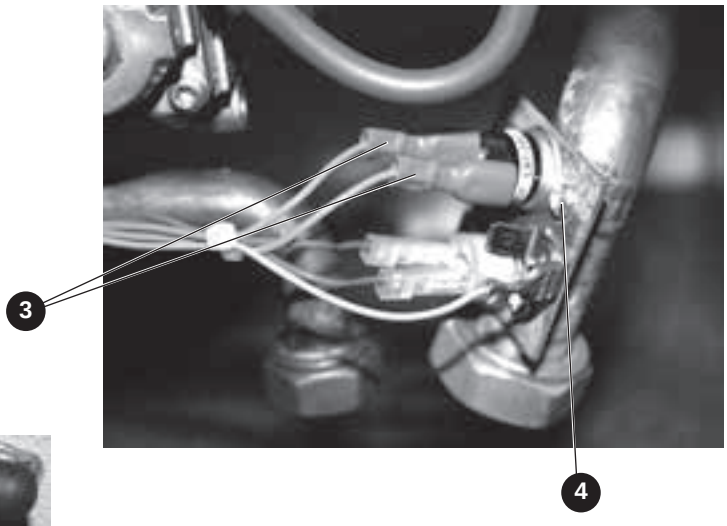

mexico HE30 & HE36

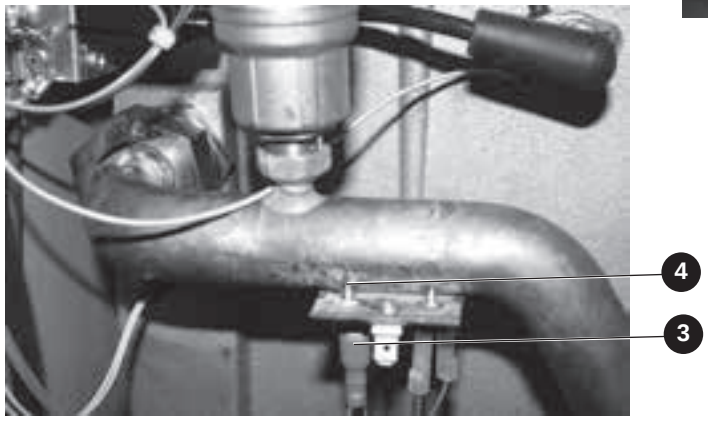

64 DRY FIRE THERMISTOR REPLACEMENT

1. Refer to Frame 51.
2. Remove the boiler front panels and inner sealing panel. Refer to Frames 44 and 45.
3. Drain down the system.
4. Pull off the electrical connection.
5. Unscrew and withdraw the thermistor.
6. Fit the new thermistor, using the gasket supplied.
7. Reassemble in reverse order.
8. Check operation of the boiler. Refer to Frame 51.

mexico HE30 & HE36

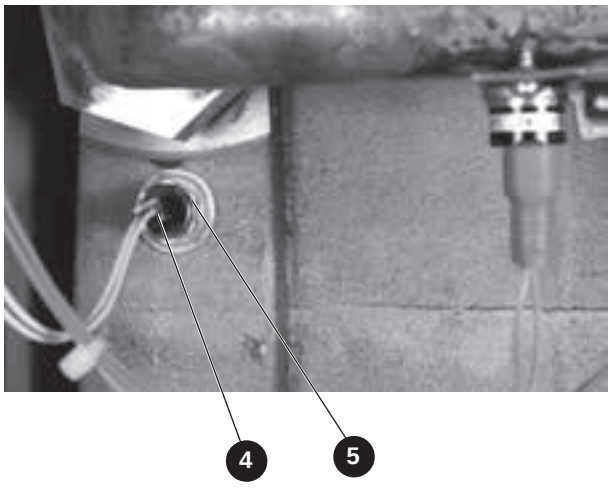

mexico HE15, HE18 & HE24

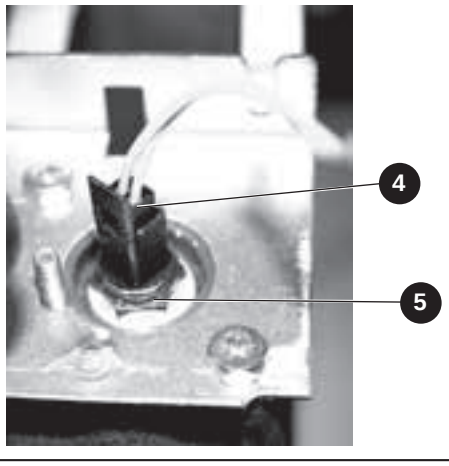

65 COMBUSTION CHAMBER INSULATION REPLACEMENT (HE15, HE18 and HE24 only)

INSULATION NOW SUPPLIED AS ONE PIECE WHICH IS FLEXIBLE AND EASY TO SHAPE AND INSTALL

Ideal Heating recommends that, for your own comfort and safety and to comply with good working practice, the procedure described below is followed:

1. Refer to 'Replacement of Components' Frame.

2. Remove the boiler front and sealing panels. Refer to 'Boiler Front Panel Removal' and 'Boiler Sealing Panel Removal' Frame.

3. Remove the fan / venturi assembly. Refer to 'Fan and Venturi Assembly removal and cleaning' Frame.

4. Remove the burner. Refer to 'Burner removal and cleaning' Frame.

5. Remove the ignition electrode. Refer to 'Ignition Electrode replacement' Frame.

6. Remove the flame detection electrode. Refer to 'Flame Detection electrode replacement' Frame.

7. Remove the front and rear ionisation probes and discard.

Prior to removal of the board the following protective equipment should be worn:

- **Face mask supplied with the spare part.**

- **Gloves supplied with the spare part.**

8. Damp down the combustion chamber area containing the insulation boards.

9. Remove the split pin and washer from the RHS of the combustion chamber and discard.

10. Remove the insulation boards. The replacement one piece insulation board is supplied in a plastic bag. This bag should be retained and the discarded boards should now be placed into it.

11. Sweep any dampened particles and place in the plastic bag.

12. Fit new insulation board -

(a) Locate and align the insulation with the electrode holes and position the insulation into the combustion chamber.

(b) Push the flexible material into the corners of the combustion chamber ensuring it is flat and flush against the combustion chamber wall.

(c) Interlock the insulation piece along the back wall of the combustion chamber.

(d) Again push the flexible material into the corners of the combustion chamber ensuring it is flat and flush against the combustion chamber wall.

(e) Secure the insulation by replacing the ionisation probes with those supplied in the kit. Note that ionisation probes are a serviceable component and require inspecting annually.

Note. *The insulation is designed to be interlocking and should be fitted as shown.*

13. Remove the gloves and face mask and place them in the plastic bag.

14. Wash your hands and any areas of skin which may have come into contact with any of the particles from the insulation board.

Note. *Seal the plastic bag and dispose of it and its contents into a commercial tip.*

15. Reassemble in reverse order.

16. Check operation of the boiler. Refer to 'General Checks' Frames.

Old Style Insulation

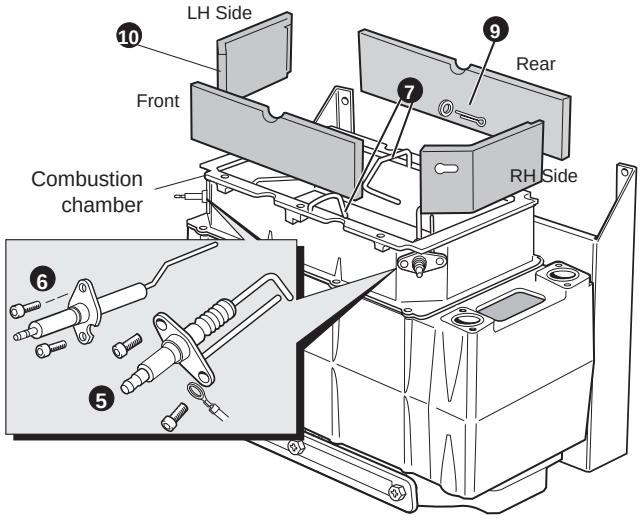

New Style Insulation

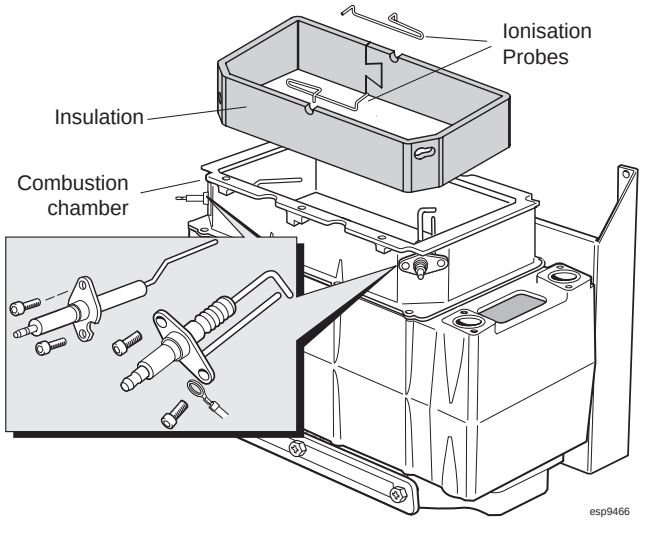

66 HEAT EXCHANGER REPLACEMENT

Refer also to Frame 10, 'Boiler exploded view'.

1. Refer to Frame 51.
2. Remove boiler front panels and inner sealing panel refer frames 44 & 45.
3. Remove the outer wall sealing plate (if fitted) and turn the terminal anticlockwise to unlock the turret bayonet fixing and pull the terminal to disconnect the boiler turret from the flue assembly.
4. Fully drain the system
5. Disconnect the gas, water flow & water return union connections at the pre-piping frame
6. Disconnect the condensate connection at the 'S' trap and the condensate pump (if fitted)
7. Protect the floor area front of the boiler, remove the screws fixing the boiler to the pre-piping frame and pull the boiler forward to clear any kitchen unit obstructions taking care with the electrical wiring.
8. Remove the fan & venturi assembly (refer to frame 46)
9. Remove burner (refer to frame 47)
10. Remove ignition electrode (frame 55) & detection electrode (frame 56)
11. HE30 & HE36 models only – Remove the spark generator (frame 57) and remove the electrical connections from the flow thermistor (frame 52 and the overheat thermostat (frame 63)
12. Remove the dry fire thermostat (frame 64)
13. HE15, 18 & 24 only – Remove the rubber plug to gain screwdriver access to the fixing screw retaining the heat exchanger bottom right copper pipe bracket and remove the screw.
14. HE30 &36 only – Unscrew the copper pipe connection at the top left of the heat exchanger and remove the pipe by pulling upwards through the rubber grommet.
15. Remove the 4 screws retaining the flue turret and remove the turret.
16. Remove the 4 screws retaining the flue support bracket.
17. Remove the 19 screws retaining the rear air box and remove the box.
18. HE15, 18 & 24 only- Pull the flue elbow bracket slightly sideways to release the elbow and pull the plastic flue elbow assembly from its joint.
19. HE30 &36 only- Pull the plastic pipe from its joint.



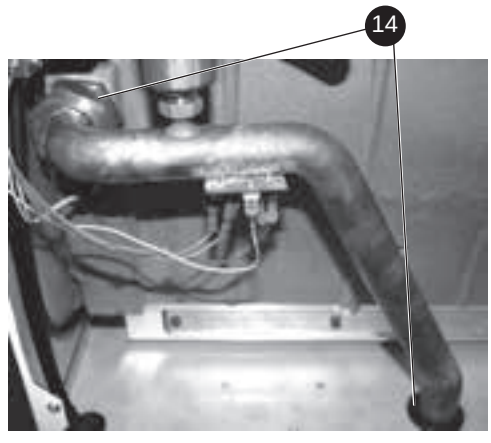

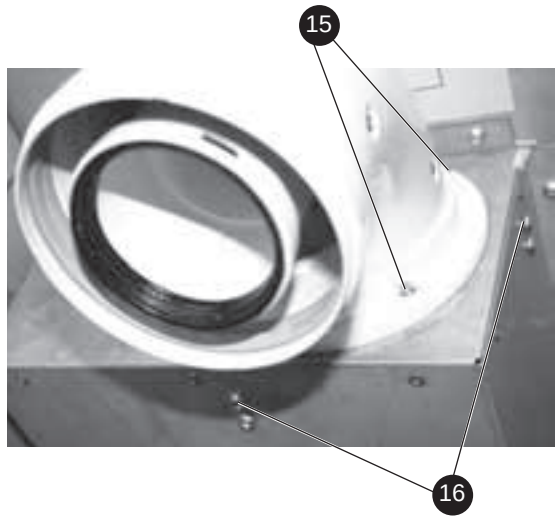

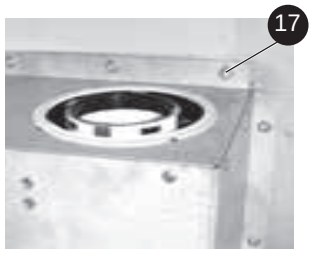

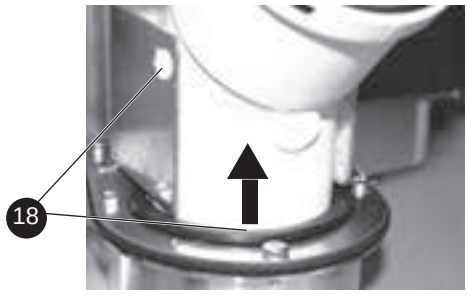

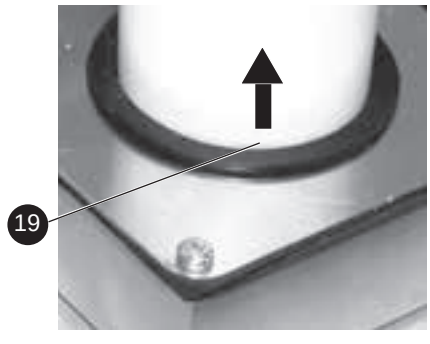

continued . . . .

67 HEAT EXCHANGER REPLACEMENT . . .*continued*

20. HE15, 18 & 24 only- Unscrew the 5mm hex. Hd. Screw retaining the copper pipe retention plate and remove plate.

21. HE30 & 36 only - Unscrew the return connection union.





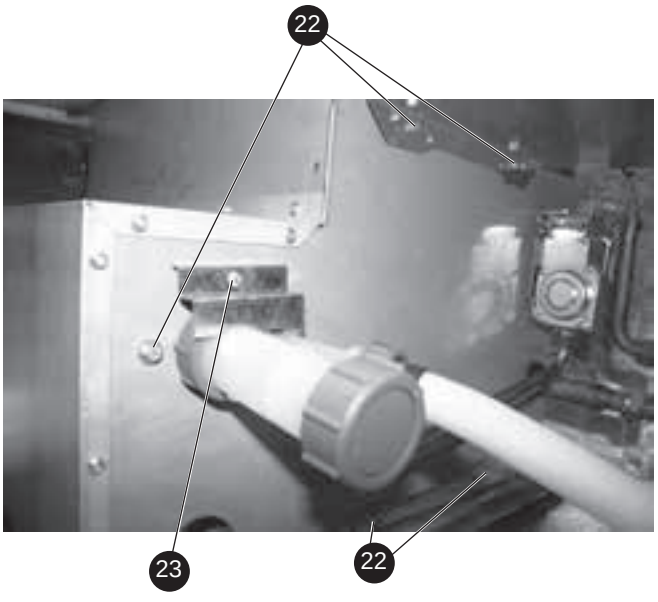

22. Remove the 5 screws retaining the sump.

23. Remove the 'S' trap bracket fixing screw and remove the 'S' trap.

24. Lift the heat exchanger to clear the bottom panel, pull forward and remove.

25. Fit the new heat exchanger, reassembling in reverse order, replacing gaskets or seals if any sign of damage or deterioration is evident. To ensure a positive flue seal is confirmed it may be necessary to remove the worktop or adjacent cupboard to view the joint.

26. Ensure all gas valve connections are gas tight with a gas soundness check up to the gas control valve.

27. Check the operation of the boiler. Refer to frame 51.

68 INNER SEALING PANEL SEAL REPLACEMENT

1. Refer Frame 51.

2. Remove the boiler front panels and refer to Frame 44.

3. Remove the inner sealing panel. Refer to Frame 45.

4. Remove the old seal from the panel and thoroughly clean the panel surfaces.

5. Fit the new adhesive seals - note that they are supplied to the correct length for the relevant sides.

6. Reassemble in reverse order.

Note.
Ensure that the boiler sealing panel is correctly seated, compressing the seal to make an airtight joint.

7. Check operation of boiler. Refer to Frame 51.

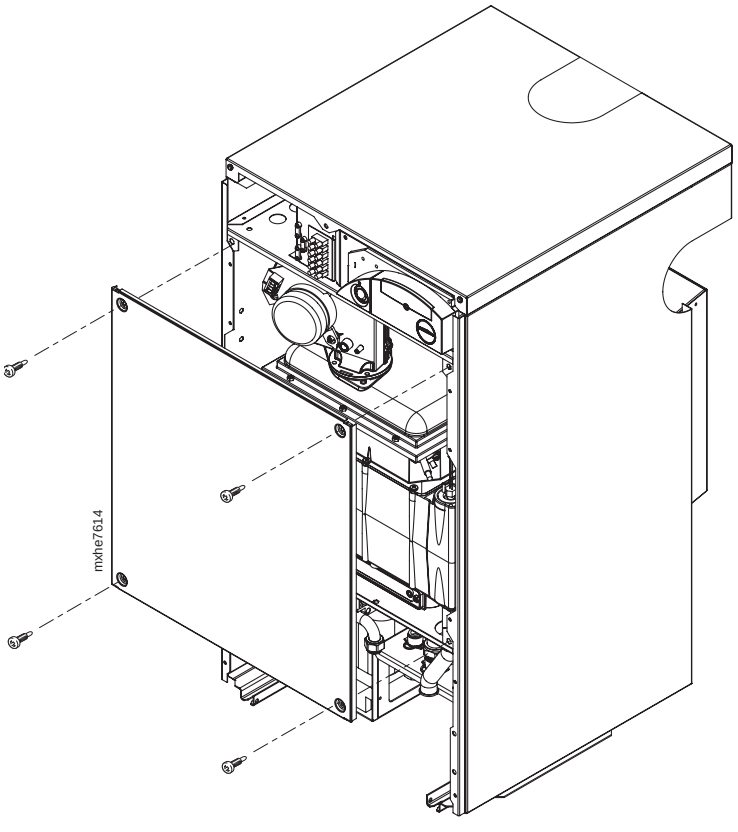

69 CONDENSATE 'S' TRAP REPLACEMENT & CONDENSATE PUMP (IF FITTED)

1. Refer to Frame 51.
2. Remove the boiler front panels. Refer to Frame 44.
3. Condense pump removal (if fitted):
   - **a.** Disconnect the outlet pipe rubber connecting joint taking care to capture any liquid held in the pipe.
   - **b.** Lift the inlet pipe to clear the pump.
   - **c.** Remove the pump wiring cover.
   - **d.** Remove the 5 wires from the terminal strip.
   - **e.** Lift the condensate pump from the two screw fixings.
   - **f.** Pull the pump forward and remove the wiring through the top grommet.

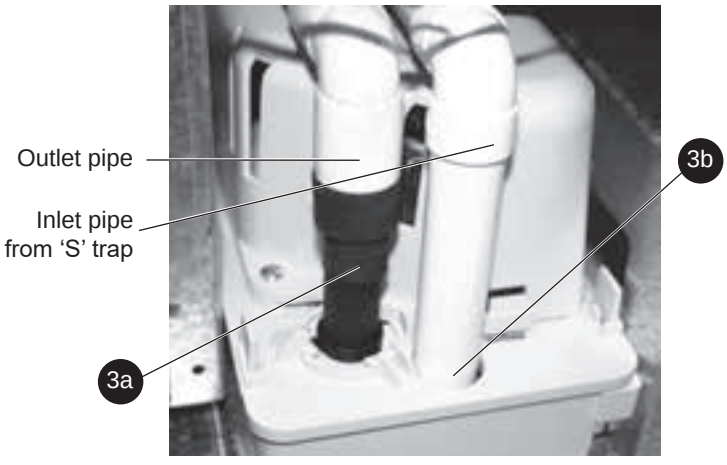

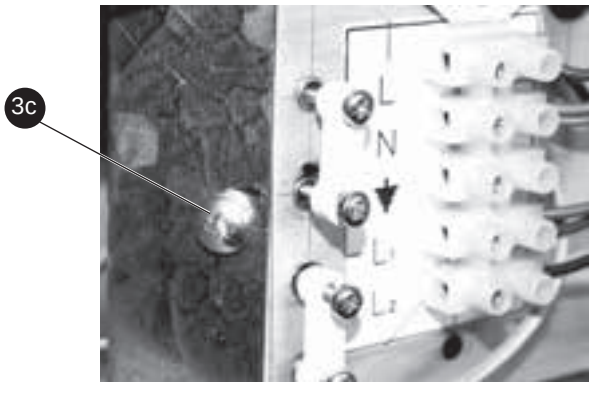



4. Undo the plastic union nut on the condensate 'S' trap outlet and disconnect the flexible hose.
5. Remove the screw retaining the 'S' trap bracket and remove the bracket.
6. Loosen the top nut on the 'S' trap then pull the trap down and forward to remove.
7. Reassemble in reverse order, ensuring the condensate pump is correctly replaced.
8. Check operation of the boiler. Refer to Frame 51.

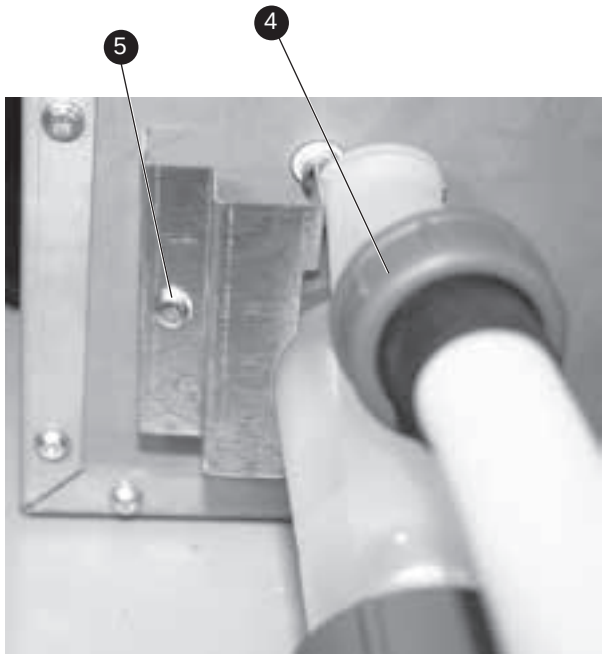

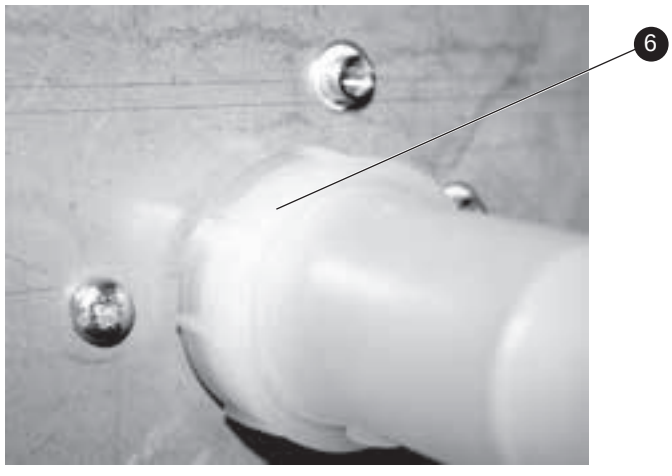

70 FAULT FINDING CHART MAIN MENU

In order to assist fault finding the boiler has an LED diagnostic display. The key to the display codes is as follows:

IF BOILER FAILS TO RUN WHEN DEMAND IS PRESENT	**GO TO FRAME 71**
ALTERNATING 'L' 'F'	**GO TO FRAME 72**
ALTERNATING 'L' 'E' OR 'HE'	**GO TO FRAME 73**
ALTERNATING 'L' 'A'	**GO TO FRAME 74**
ALTERNATING 'L' '8'	**GO TO FRAME 75**
ALTERNATING 'H' '1'	**GO TO FRAME 76**
ALTERNATING 'H' 'F'	**GO TO FRAME 77**
ALTERNATING 'H' '4' or 'H9' or 'L9'	**GO TO FRAME 78**
ALTERNATING 'H' 'n'	**GO TO FRAME 79**

71 CONDENSATE PUMP FAILURE

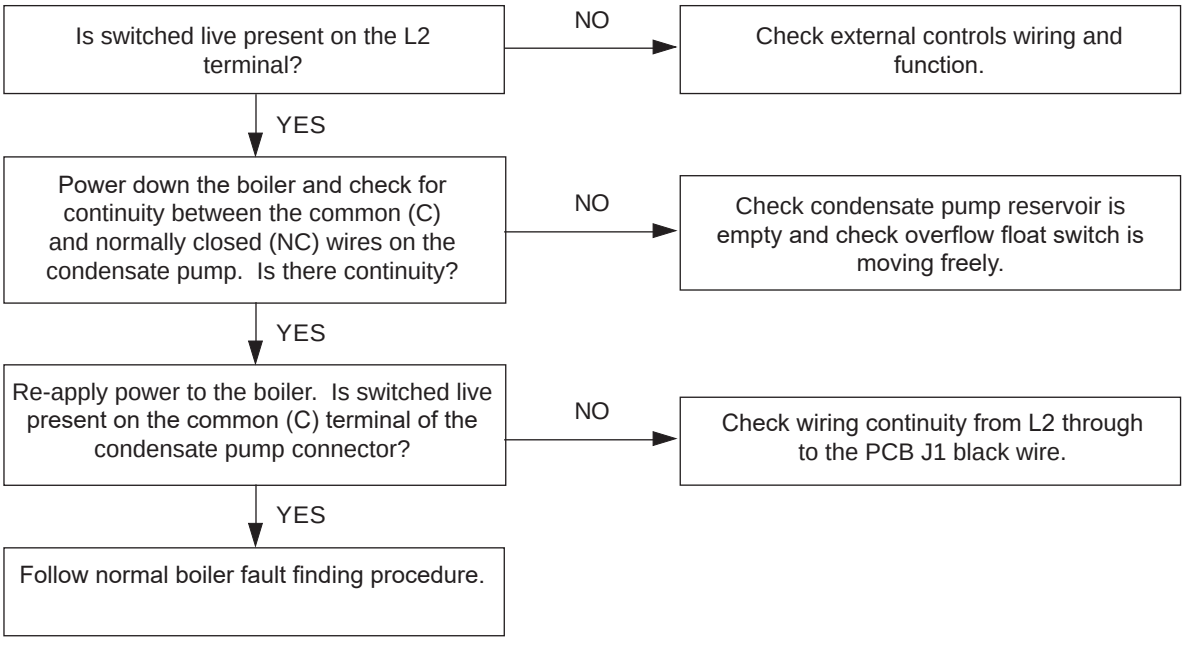

72 L.....F..... (FLAME ERROR)

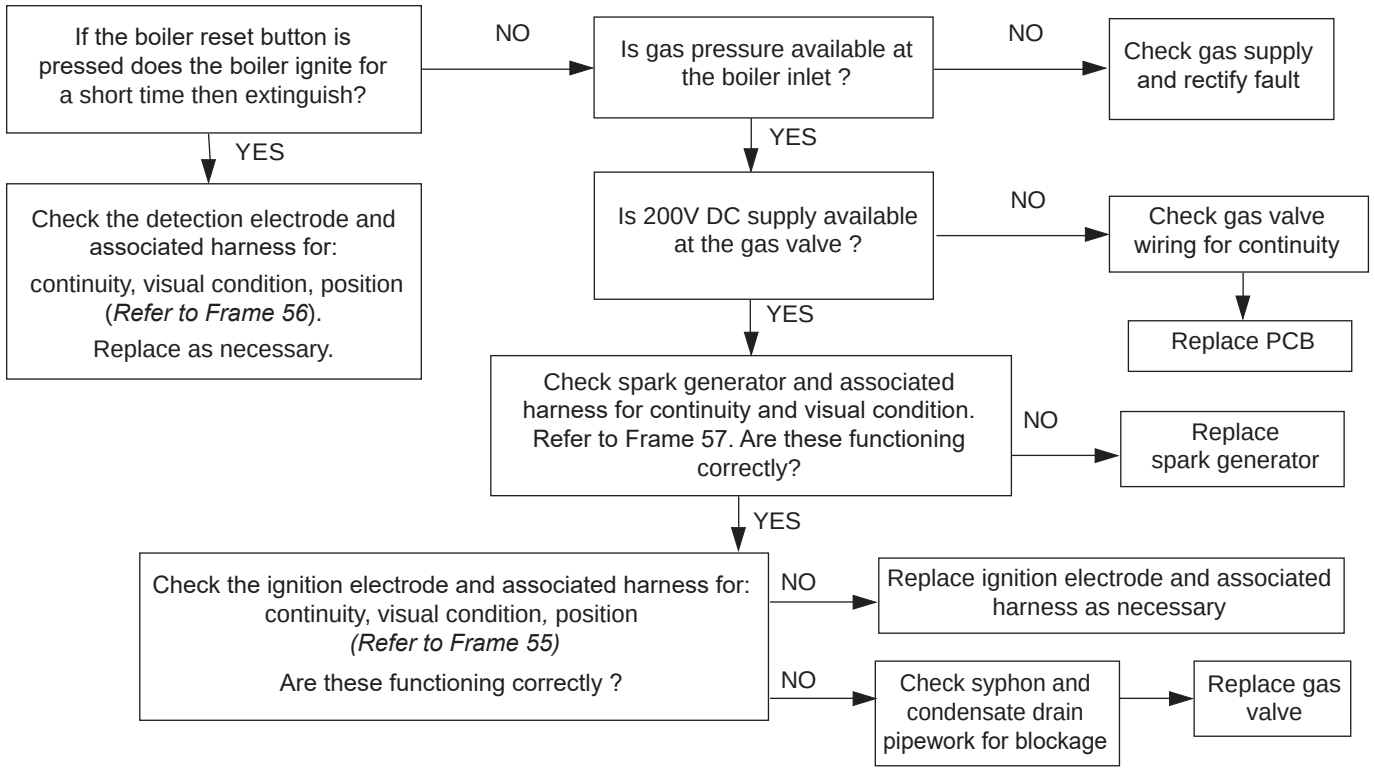

Note. *Due to the wave form of the rectified voltage the reading will vary, depending on the type of meter used to measure the value (some may measure the possible peak voltage of 339V). In general terms, a reading greater than 150V indicates that the correct voltage is supplied to the gas valve. As an alternative to a multimeter a mains checking device may be used. E.g. an electrical screwdriver or a mains tester.*

73 L.....E..... or H.....E..... (BOARD ERROR)

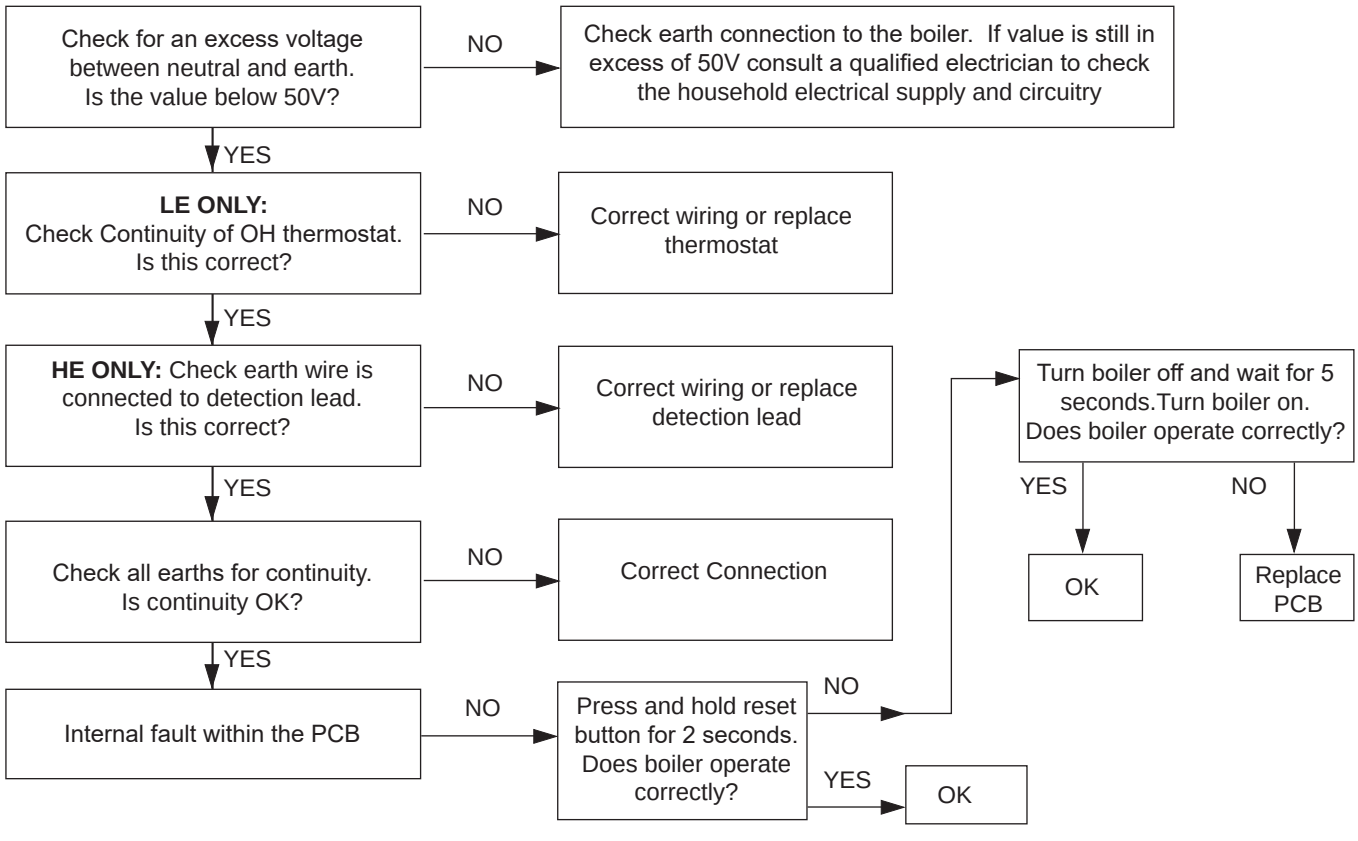

74 L.....A..... (OVERHEAT ERROR)

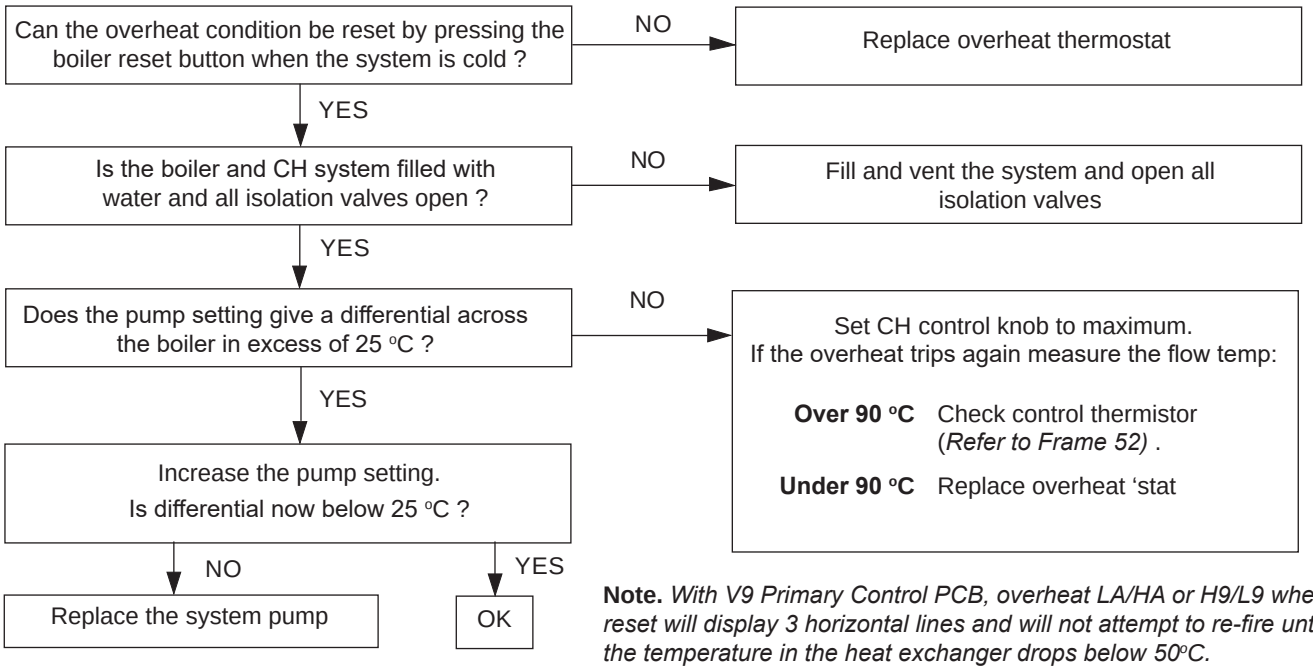

Note. *With V9 Primary Control PCB, overheat LA/HA or H9/L9 when reset will display 3 horizontal lines and will not attempt to re-fire until the temperature in the heat exchanger drops below 50°C.*

75 L....8..... (FAN ERROR)

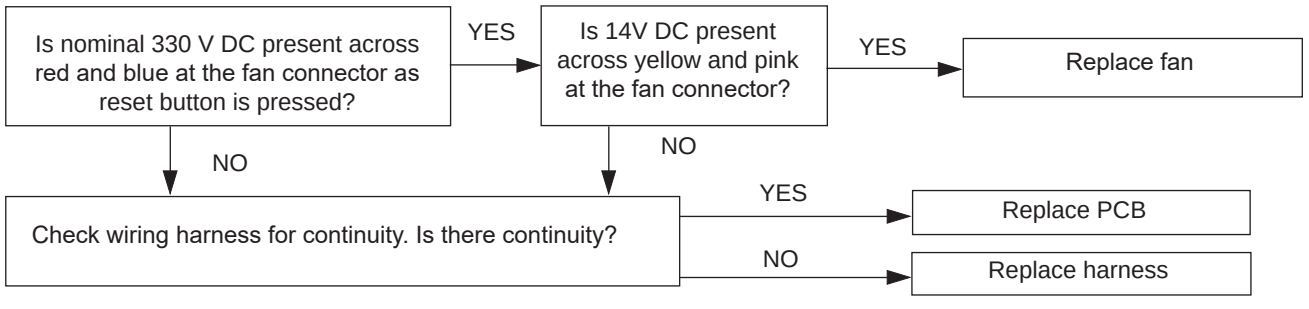

76 H.....1..... (FLOW THERMISTOR ERROR)

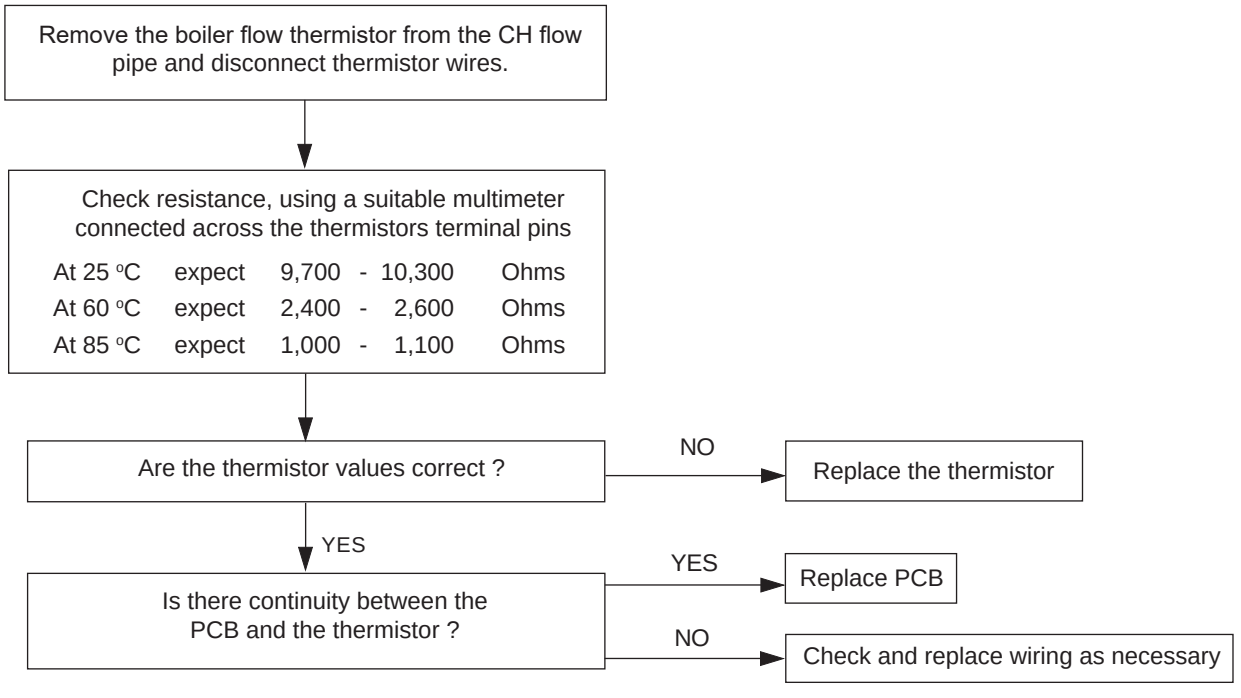

77 H.....F..... (FLAME DETECTION - SHORT CIRCUIT ERROR)

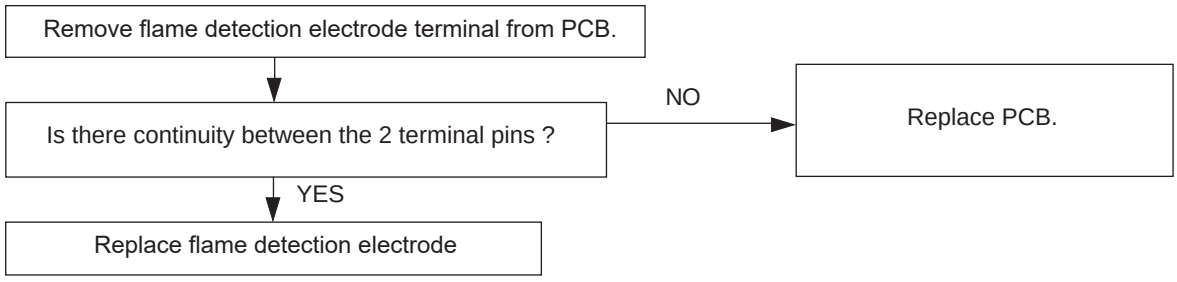

78 H.....4..... (DRY FIRE THERMISTOR ERROR)

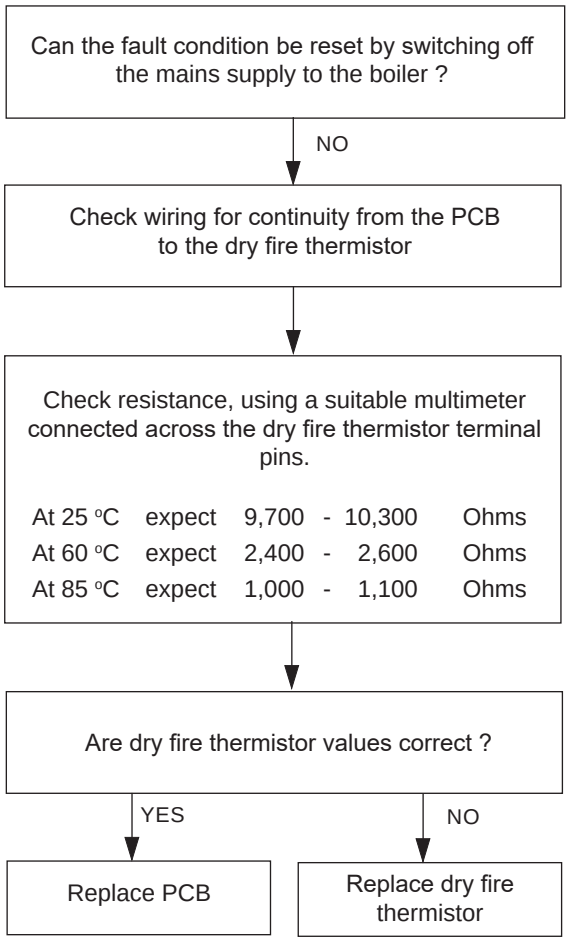

H9/L9 (FLUE GAS OVERHEAT)

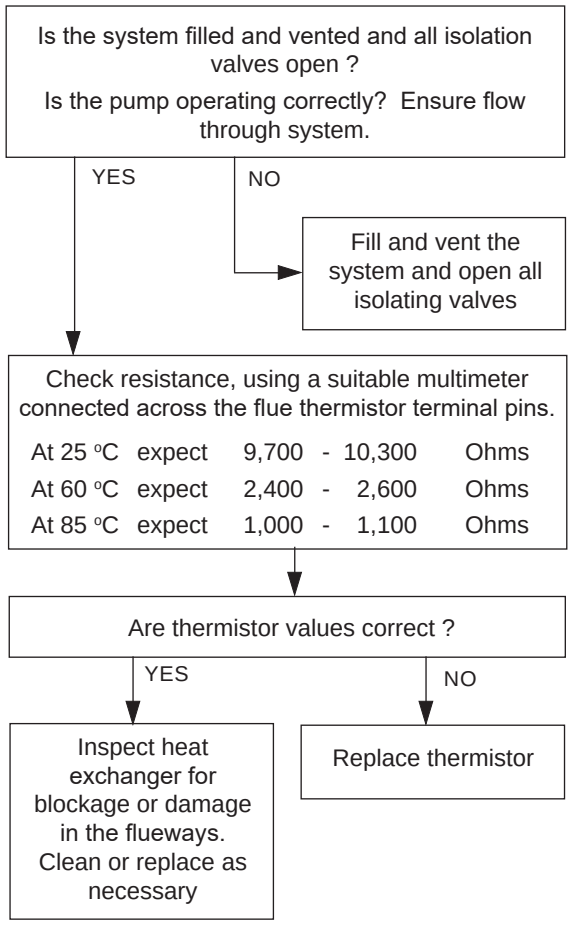

Note. *With V9 Primary Control PCB, overheat LA/HA or H9/L9 when reset will display 3 horizontal lines and will not attempt to re-fire until the temperature in the heat exchanger drops below 50°C.*

79 H.....n..... (PHASE REVERSAL ERROR)

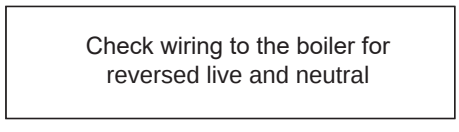

SPARE PARTS

When replacing any part on this appliance use only spare parts that you can be assured conform to the safety and performance specification that we require. Do not use reconditioned or copy parts that have not been clearly authorised by Ideal. Failure to do so could affect safety or performance of this appliance.

Comprehensive spares parts information and details of approved Ideal Parts Distributors are available on **idealparts.com**

Our Parts team are also available to help with your Ideal Spare Parts enquiries on 01482 498665.

When calling, and to ensure we can provide you with the most accurate parts information, please ensure you have the following to hand;

- Boiler Model
- Appliance GC Number
- Boiler Serial Number

Code Of Practice

For the installation, commissioning and servicing of domestic heating and hot water products

Benchmark places responsibilities on both manufacturers and installers.* The purpose is to ensure that customers** are provided with the correct equipment for their needs, that it is installed, commissioned and serviced in accordance with the manufacturer's instructions by competent persons and that it meets the requirements of the appropriate Building Regulations. Installers are required to carry out work in accordance with the following:

Standards of Work

- Be competent and qualified to undertake the work required.
- Install, commission, service and use products in accordance with the manufacturer's instructions provided.
- Ensure that where there is responsibility for design work, the installation is correctly sized and fit for purpose.
- Meet the requirements of the appropriate Building Regulations. Where this involves notifiable work be a member of a Competent Persons Scheme or confirm that the customer has notified Local Authority Building Control (LABC), prior to work commencing.
- Complete all relevant sections of the Benchmark Checklist/Service Record when carrying out commissioning or servicing of a product or system.
- Ensure that the product or system is left in a safe condition and, whenever possible, in good working order.
- Highlight to the customer any remedial or improvement work identified during the course of commissioning or servicing work.
- Refer to the manufacturer's helpline where assistance is needed.
- Report product faults and concerns to the manufacturer in a timely manner.

Customer Service

- Show the customer any identity card that is relevant to the work being carried out prior to commencement or on request.
- Give a full and clear explanation/demonstration of the product or system and its operation to the customer.
- Hand over the manufacturer's instructions, including the Benchmark Checklist, to the customer on completion of an installation.
- Obtain the customer's signature, on the Benchmark Checklist, to confirm satisfactory demonstration and receipt of manufacturer's instructions.
- Advise the customer that regular product servicing is needed, in line with manufacturers' recommendations, to ensure that safety and efficiency is maintained.
- Respond promptly to calls from a customer following completion of work, providing advice and assistance by phone and, if necessary, visiting the customer.
- Rectify any installation problems at no cost to the customer during the installer's guarantee period.

benchmark
COLLECTIVE MARK
THE MARK OF QUALITY FOR THE INSTALLATION, COMMISSIONING AND SERVICING OF DOMESTIC HEATING AND HOT WATER SYSTEMS

*The use of the word "installer" is not limited to installation itself and covers those carrying out installation, commissioning and/or servicing of heating and hot water products, or the use of supporting products (such as water treatment or test equipment).

**Customer includes householders, landlords and tenants.

© Heating and Hotwater Industry Council (HHIC)

Benchmark Commissioning & Warranty Validation Service Record

It is a requirement that the boiler is installed and commissioned to the manufacturers' instructions and the data fields on the commissioning checklist completed in full.

To instigate the boiler warranty the boiler needs to be registered with the manufacturer within one month of the installation. The warranty rests with the end-user (consumer), and they should be made aware it is ultimately their responsibility to register with the manufacturer, within the allotted time period.

It is essential that the boiler is serviced in line with the manufacturers' recommendations, at least annually. This must be carried out by a competent Gas Safe registered engineer. The service details should be recorded on the Benchmark Service and Interim Boiler Work Record and left with the householder. Failure to comply with the manufacturers' servicing instructions and requirements will invalidate the warranty.



www.hhic.co.uk

This Commissioning Checklist is to be completed in full by the competent person who commissioned the boiler as a means of demonstrating compliance with the appropriate Building Regulations and then handed to the customer to keep for future reference.

Failure to install and commission according to the manufacturers' instructions and complete this Benchmark Commissioning Checklist will invalidate the warranty. This does not affect the customer's statutory rights.

* All installations in England and Wales must be notified to Local Authority Building Control (LABC) either directly or through a Competent Persons Scheme. A Building Regulations Compliance Certificate will then be issued to the customer.

© Heating and Hotwater Industry Council (HHIC)



www.centralheating.co.uk

GAS BOILER SYSTEM COMMISSIONING CHECKLIST & WARRANTY VALIDATION RECORD

| | | |

SERVICE & INTERIM BOILER WORK RECORD

It is recommended that your boiler and heating system are regularly serviced and maintained, in line with manufacturers' instructions, and that the appropriate service / interim work record is completed.

Service provider

When completing a service record (as below), please ensure you have carried out the service as described in the manufacturers' instructions. Always use the manufacturers' specified spare parts.

SERVICE/INTERIM WORK ON BOILER delete as appropriate				Date:	
Engineer name:			Company name:		
Telephone No:			Gas Safe registration No:		
Max rate	CO	ppm	CO_2 %	CO/CO_2	
Min rate	CO	ppm	CO_2 %	CO/CO_2	
Where possible, has a flue integrity check been undertaken in accordance with manufacturers' instructions, and readings are correct?"				yes	
Gas rate:	m^3/h		OR	ft^3/h	
Were parts fitted? delete as appropriate			Yes	No	
Parts fitted:					
System inhibitor concentration has been checked and appropriate action taken, in accordance with BS 7593 and boiler manufacturers' instructions. *				yes	n/a
Comments:					
Signature:					

*A System inhibitor efficacy test is required on every annual service in accordance with the manufacturers' instructions and BS 7593. It is only acceptable to not have undertaken this if the service engineers attendance visit was in between annual services to attend a non-water facing component.

SERVICE/INTERIM WORK ON BOILER delete as appropriate				Date:	
Engineer name:			Company name:		
Telephone No:			Gas Safe registration No:		
Max rate	CO	ppm	CO_2 %	CO/CO_2	
Min rate	CO	ppm	CO_2 %	CO/CO_2	
Where possible, has a flue integrity check been undertaken in accordance with manufacturers' instructions, and readings are correct?"				yes	
Gas rate:	m^3/h		OR	ft^3/h	
Were parts fitted? delete as appropriate			Yes	No	
Parts fitted:					
System inhibitor concentration has been checked and appropriate action taken, in accordance with BS 7593 and boiler manufacturers' instructions. *				yes	n/a
Comments:					
Signature:					

*A System inhibitor efficacy test is required on every annual service in accordance with the manufacturers' instructions and BS 7593. It is only acceptable to not have undertaken this if the service engineers attendance visit was in between annual services to attend a non-water facing component.

SERVICE/INTERIM WORK ON BOILER delete as appropriate				Date:	
Engineer name:			Company name:		
Telephone No:			Gas Safe registration No:		
Max rate	CO	ppm	CO_2 %	CO/CO_2	
Min rate	CO	ppm	CO_2 %	CO/CO_2	
Where possible, has a flue integrity check been undertaken in accordance with manufacturers' instructions, and readings are correct?"				yes	
Gas rate:	m^3/h		OR	ft^3/h	
Were parts fitted? delete as appropriate			Yes	No	
Parts fitted:					
System inhibitor concentration has been checked and appropriate action taken, in accordance with BS 7593 and boiler manufacturers' instructions. *				yes	n/a
Comments:					
Signature:					

*A System inhibitor efficacy test is required on every annual service in accordance with the manufacturers' instructions and BS 7593. It is only acceptable to not have undertaken this if the service engineers attendance visit was in between annual services to attend a non-water facing component.

SERVICE/INTERIM WORK ON BOILER delete as appropriate				Date:	
Engineer name:			Company name:		
Telephone No:			Gas Safe registration No:		
Max rate	CO	ppm	CO_2 %	CO/CO_2	
Min rate	CO	ppm	CO_2 %	CO/CO_2	
Where possible, has a flue integrity check been undertaken in accordance with manufacturers' instructions, and readings are correct?"				yes	
Gas rate:	m^3/h		OR	ft^3/h	
Were parts fitted? delete as appropriate			Yes	No	
Parts fitted:					
System inhibitor concentration has been checked and appropriate action taken, in accordance with BS 7593 and boiler manufacturers' instructions. *				yes	n/a
Comments:					
Signature:					

*A System inhibitor efficacy test is required on every annual service in accordance with the manufacturers' instructions and BS 7593. It is only acceptable to not have undertaken this if the service engineers attendance visit was in between annual services to attend a non-water facing component.

SERVICE/INTERIM WORK ON BOILER delete as appropriate				Date:	
Engineer name:			Company name:		
Telephone No:			Gas Safe registration No:		
Max rate	CO	ppm	CO_2 %	CO/CO_2	
Min rate	CO	ppm	CO_2 %	CO/CO_2	
Where possible, has a flue integrity check been undertaken in accordance with manufacturers' instructions, and readings are correct?"				yes	
Gas rate:	m^3/h		OR	ft^3/h	
Were parts fitted? delete as appropriate			Yes	No	
Parts fitted:					
System inhibitor concentration has been checked and appropriate action taken, in accordance with BS 7593 and boiler manufacturers' instructions. *				yes	n/a
Comments:					
Signature:					

*A System inhibitor efficacy test is required on every annual service in accordance with the manufacturers' instructions and BS 7593. It is only acceptable to not have undertaken this if the service engineers attendance visit was in between annual services to attend a non-water facing component.

* All installations in England and Wales must be notified to Local Authority Building Control (LABC) either directly or through a Competent Persons Scheme. A Building Regulations Compliance Certificate will then be issued to the customer.

© Heating and Hotwater Industry Council (HHIC)

benchmark COLLECTIVE MARK
THE MARK OF QUALITY FOR THE INSTALLATION, COMMISSIONING AND SERVICING OF DOMESTIC HEATING AND HOT WATER SYSTEMS

www.centralheating.co.uk

SERVICE & INTERIM BOILER WORK RECORD

It is recommended that your boiler and heating system are regularly serviced and maintained, in line with manufacturers' instructions, and that the appropriate service / interim work record is completed.

Service provider

When completing a service record (as below), please ensure you have carried out the service as described in the manufacturers' instructions. Always use the manufacturers specified spare parts.

SERVICE/INTERIM WORK ON BOILER delete as appropriate				Date:	
Engineer name:			Company name:		
Telephone N^{o}:			Gas Safe registration N^{o}:		
Max rate	CO	ppm	CO_2	%	CO/CO_2
Min rate	CO	ppm	CO_2	%	CO/CO_2
Where possible, has a flue integrity check been undertaken in accordance with manufacturers' instructions, and readings are correct?"					yes
Gas rate:	m^3/h		OR		ft^3/h
Were parts fitted?delete as appropriate			Yes		No
Parts fitted:					
System inhibitor concentration has been checked and appropriate action taken, in accordance with BS 7593 and boiler manufacturers' instructions. *			yes		n/a
Comments:					
Signature:					

*A System inhibitor efficacy test is required on every annual service in accordance with the manufacturers' instructions and BS 7593. It is only acceptable to not have undertaken this if the service engineers attendance visit was in between annual services to attend a non-water facing component.

SERVICE/INTERIM WORK ON BOILER delete as appropriate				Date:	
Engineer name:			Company name:		
Telephone N^{o}:			Gas Safe registration N^{o}:		
Max rate	CO	ppm	CO_2	%	CO/CO_2
Min rate	CO	ppm	CO_2	%	CO/CO_2
Where possible, has a flue integrity check been undertaken in accordance with manufacturers' instructions, and readings are correct?"					yes
Gas rate:	m^3/h		OR		ft^3/h
Were parts fitted?delete as appropriate			Yes		No
Parts fitted:					
System inhibitor concentration has been checked and appropriate action taken, in accordance with BS 7593 and boiler manufacturers' instructions. *			yes		n/a
Comments:					
Signature:					

*A System inhibitor efficacy test is required on every annual service in accordance with the manufacturers' instructions and BS 7593. It is only acceptable to not have undertaken this if the service engineers attendance visit was in between annual services to attend a non-water facing component.

SERVICE/INTERIM WORK ON BOILER delete as appropriate				Date:	
Engineer name:			Company name:		
Telephone N^{o}:			Gas Safe registration N^{o}:		
Max rate	CO	ppm	CO_2	%	CO/CO_2
Min rate	CO	ppm	CO_2	%	CO/CO_2
Where possible, has a flue integrity check been undertaken in accordance with manufacturers' instructions, and readings are correct?"					yes
Gas rate:	m^3/h		OR		ft^3/h
Were parts fitted?delete as appropriate			Yes		No
Parts fitted:					
System inhibitor concentration has been checked and appropriate action taken, in accordance with BS 7593 and boiler manufacturers' instructions. *			yes		n/a
Comments:					
Signature:					

*A System inhibitor efficacy test is required on every annual service in accordance with the manufacturers' instructions and BS 7593. It is only acceptable to not have undertaken this if the service engineers attendance visit was in between annual services to attend a non-water facing component.

SERVICE/INTERIM WORK ON BOILER delete as appropriate				Date:	
Engineer name:			Company name:		
Telephone N^{o}:			Gas Safe registration N^{o}:		
Max rate	CO	ppm	CO_2	%	CO/CO_2
Min rate	CO	ppm	CO_2	%	CO/CO_2
Where possible, has a flue integrity check been undertaken in accordance with manufacturers' instructions, and readings are correct?"					yes
Gas rate:	m^3/h		OR		ft^3/h
Were parts fitted?delete as appropriate			Yes		No
Parts fitted:					
System inhibitor concentration has been checked and appropriate action taken, in accordance with BS 7593 and boiler manufacturers' instructions. *			yes		n/a
Comments:					
Signature:					

*A System inhibitor efficacy test is required on every annual service in accordance with the manufacturers' instructions and BS 7593. It is only acceptable to not have undertaken this if the service engineers attendance visit was in between annual services to attend a non-water facing component.

SERVICE/INTERIM WORK ON BOILER delete as appropriate				Date:	
Engineer name:			Company name:		
Telephone N^{o}:			Gas Safe registration N^{o}:		
Max rate	CO	ppm	CO_2	%	CO/CO_2
Min rate	CO	ppm	CO_2	%	CO/CO_2
Where possible, has a flue integrity check been undertaken in accordance with manufacturers' instructions, and readings are correct?"					yes
Gas rate:	m^3/h		OR		ft^3/h
Were parts fitted?delete as appropriate			Yes		No
Parts fitted:					
System inhibitor concentration has been checked and appropriate action taken, in accordance with BS 7593 and boiler manufacturers' instructions. *			yes		n/a
Comments:					
Signature:					

*A System inhibitor efficacy test is required on every annual service in accordance with the manufacturers' instructions and BS 7593. It is only acceptable to not have undertaken this if the service engineers attendance visit was in between annual services to attend a non-water facing component.

SERVICE/INTERIM WORK ON BOILER delete as appropriate				Date:	
Engineer name:			Company name:		
Telephone N^{o}:			Gas Safe registration N^{o}:		
Max rate	CO	ppm	CO_2	%	CO/CO_2
Min rate	CO	ppm	CO_2	%	CO/CO_2
Where possible, has a flue integrity check been undertaken in accordance with manufacturers' instructions, and readings are correct?"					yes
Gas rate:	m^3/h		OR		ft^3/h
Were parts fitted?delete as appropriate			Yes		No
Parts fitted:					
System inhibitor concentration has been checked and appropriate action taken, in accordance with BS 7593 and boiler manufacturers' instructions. *			yes		n/a
Comments:					
Signature:					

*A System inhibitor efficacy test is required on every annual service in accordance with the manufacturers' instructions and BS 7593. It is only acceptable to not have undertaken this if the service engineers attendance visit was in between annual services to attend a non-water facing component.

* All installations in England and Wales must be notified to Local Authority Building Control (LABC) either directly or through a Competent Persons Scheme. A Building Regulations Compliance Certificate will then be issued to the customer.

© Heating and Hotwater Industry Council (HHIC)

benchmark COLLECTIVE MARK
THE MARK OF QUALITY FOR THE INSTALLATION, COMMISSIONING AND SERVICING OF DOMESTIC HEATING AND HOT WATER SYSTEMS

www.centralheating.co.uk

FLOWCHART FOR CO LEVEL AND COMBUSTION RATIO CHECK ON COMMISSIONING A CONDENSING BOILER

Important Preliminary Information on Checks

The air gas ratio valve is factory-set and must not be adjusted DURING COMMISSIONING.

If the boiler requires conversion to operate with a different gas family (e.g. conversion from natural gas to LPG) separate guidance is provided with the conversion kit supplied and this must be followed.

PRIOR TO CO LEVEL AND COMBUSTION RATIO CHECK

The installation instructions must have been followed, gas type verified and gas supply pressure / gas rate checked as required prior to commissioning.

As part of the installation process, ESPECIALLY WHERE A FLUE HAS BEEN FITTED BY PERSONS OTHER THAN THE BOILER INSTALLER, visually check the integrity of the whole flue system to confirm that all components are correctly assembled, fixed and supported. Check that maximum flue lengths have not been exceeded and all guidance has been followed (e.g. Gas Safe Register Technical Bulletin (TB) 008 where chimney/flues are in voids).

The ECGA should be of the correct type, as specified by BS 7967.

Prior to its use, the ECGA should have been maintained and calibrated as specified by the manufacturer. The installer must have the relevant competence for use of the analyser.

Check and zero the analyser IN FRESH AIR in accordance with the analyser manufacturer's instructions.

KEY:

CO = carbon monoxide

CO_2 = carbon dioxide

O2 = oxygen

Combustion Ratio = The CO reading measured in ppm divided by the CO_2 reading first converted to ppm

ppm = parts per million

GS(I&U)R = Gas Safety (Installation and Use) Regulations

***Minimum Rate Setting:**

Please note; this boiler cannot be set to operate continuously at minimum rate.

For further advice, contact Ideal Customer Services Department.

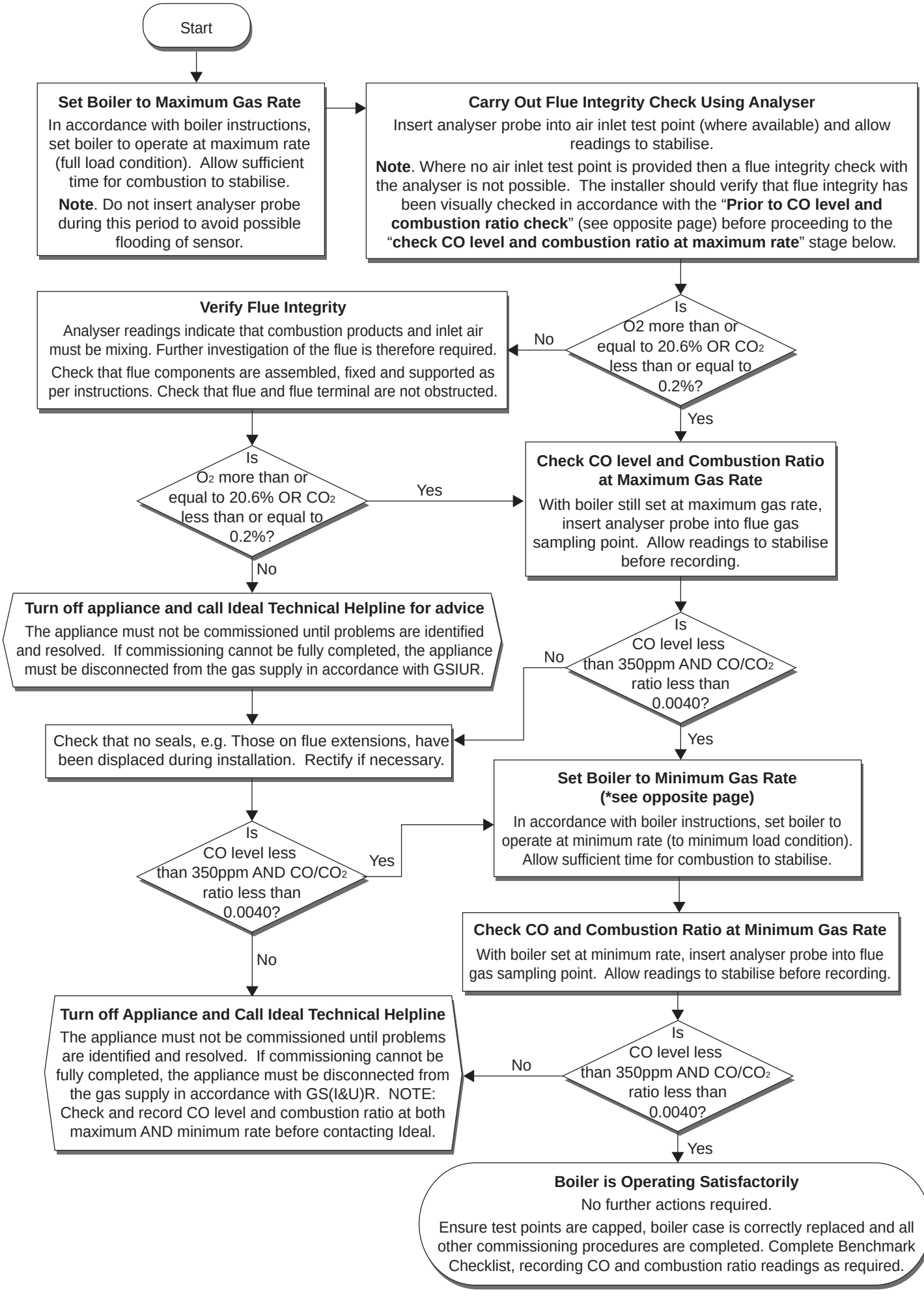
Start
Set Boiler to Maximum Gas Rate
In accordance with boiler instructions, set boiler to operate at maximum rate (full load condition). Allow sufficient time for combustion to stabilise.
Note. Do not insert analyser probe during this period to avoid possible flooding of sensor.
Carry Out Flue Integrity Check Using Analyser
Insert analyser probe into air inlet test point (where available) and allow readings to stabilise.
Note. Where no air inlet test point is provided then a flue integrity check with the analyser is not possible. The installer should verify that flue integrity has been visually checked in accordance with the "Prior to CO level and combustion ratio check" (see opposite page) before proceeding to the "check CO level and combustion ratio at maximum rate" stage below.
Is O2 more than or equal to 20.6% OR CO2 less than or equal to 0.2%?
No
Yes
Verify Flue Integrity
Analyser readings indicate that combustion products and inlet air must be mixing. Further investigation of the flue is therefore required.
Check that flue components are assembled, fixed and supported as per instructions. Check that flue and flue terminal are not obstructed.
Is O2 more than or equal to 20.6% OR CO2 less than or equal to 0.2%?
Yes
No
Check CO level and Combustion Ratio at Maximum Gas Rate
With boiler still set at maximum gas rate, insert analyser probe into flue gas sampling point. Allow readings to stabilise before recording.
Turn off appliance and call Ideal Technical Helpline for advice
The appliance must not be commissioned until problems are identified and resolved. If commissioning cannot be fully completed, the appliance must be disconnected from the gas supply in accordance with GSIUR.
Is CO level less than 350ppm AND CO/CO2 ratio less than 0.0040?
No
Yes
Check that no seals, e.g. Those on flue extensions, have been displaced during installation. Rectify if necessary.
Set Boiler to Minimum Gas Rate (*see opposite page)
In accordance with boiler instructions, set boiler to operate at minimum rate (to minimum load condition). Allow sufficient time for combustion to stabilise.
Is CO level less than 350ppm AND CO/CO2 ratio less than 0.0040?
Yes
No
Check CO and Combustion Ratio at Minimum Gas Rate
With boiler set at minimum rate, insert analyser probe into flue gas sampling point. Allow readings to stabilise before recording.
Turn off Appliance and Call Ideal Technical Helpline
The appliance must not be commissioned until problems are identified and resolved. If commissioning cannot be fully completed, the appliance must be disconnected from the gas supply in accordance with GS(I&U)R. NOTE: Check and record CO level and combustion ratio at both maximum AND minimum rate before contacting Ideal.
Is CO level less than 350ppm AND CO/CO2 ratio less than 0.0040?
No
Yes
Boiler is Operating Satisfactorily
No further actions required.
Ensure test points are capped, boiler case is correctly replaced and all other commissioning procedures are completed. Complete Benchmark Checklist, recording CO and combustion ratio readings as required.



WEEE DIRECTIVE 2012/19/EU
Waste Electrical and Electronic Equipment Directive

- At the end of the product life, dispose of the packaging and product in a corresponding recycle centre.
- Do not dispose of the unit with the usual domestic refuse.
- Do not burn the product.
- Remove the batteries.
- Dispose of the batteries according to the local statutory requirements and not with the usual domestic refuse.

FM 59915
Manufactured under an ISO 9001 registered quality management system

benchmark
COLLECTIVE MARK
THE MARK OF QUALITY FOR THE INSTALLATION, COMMISSIONING AND SERVICING OF DOMESTIC HEATING AND HOT WATER SYSTEMS

The code of practice for the installation, commissioning & servicing of central heating systems

At Ideal Heating we take our environmental impact seriously, therefore when installing any Ideal Heating product please make sure to dispose of any previous appliance in an environmentally conscious manner. Households can contact their local authority to find out how.
See https://www.gov.uk/managing-your-waste-an-overview for guidance on how to efficiently recycle your business waste.

Technical Training

Our Expert Academy offer a range of training options designed and delivered by our experts in heating.
For details please contact:
expert-academy.co.uk

Ideal Heating Ltd., pursues a policy of continuing improvement in the design and performance of its products. The right is therefore reserved to vary specification without notice.

Ideal is a trademark of Ideal Heating.

Registered Office

Ideal Boilers Ltd., National Avenue, Hull, East Yorkshire, HU5 4JB
Tel 01482 492251 Fax 01482 448858

Registration No. London 322 137

EU Authorised Representative:
Atlantic SFDT
44 Boulevard des Etats-Unis, 85 000 La Roche-Sur-Yon, France
+33 (0)2 51 44 34 34

Ideal Technical Helpline: 01482 498663
Ideal Consumer Helpline: 01482 498660
Ideal Parts: 01482 498665

idealheating.com

ideal HEATING

ideal HEATING

USER GUIDE

MEXICO HE
15 18 24 30 36

When replacing any part on this appliance, use only spare parts that you can be assured conform to the safety and performance specification that we require. Do not use reconditioned or copy parts that have not been clearly authorised by Ideal Heating.

For the very latest copy of literature for specification and maintenance practices visit our website idealheating.com where you can download the relevant information in PDF format.

October 2026
UIN 201787 A18

mexico HE15, HE18, HE24, HE30, HE36
(Natural Gas Only)

Destination Countries: GB, IE

HE15	**G.C. Appliance No. 41-429-39**
HE18	**G.C. Appliance No. 41-429-65**
HE24	**G.C. Appliance No. 41-429-98**
HE30	**G.C. Appliance No. 41-429-99**
HE36	**G.C. Appliance No. 41-415-20**

Introduction

The **mexico HE** is a floor standing, room sealed, condensing boiler featuring full sequence automatic spark ignition and fan assisted combustion.

Due to the very high efficiency of the boiler condensate is produced from the flue gases and this is drained to a suitable disposal point through the plastic waste pipe at the right lower rear of the boiler. A condensate 'plume' will also often be visible at the flue terminal.

Safety

Current Gas Safety (Installation & Use) Regulations or rules in force.

In your own interest, and that of safety, it is the law that this boiler must be installed by a Gas Safe Registered Engineer.
In IE the installation must be carried out by a Registered Gas Installer and installed in accordance with the current edition of I.S. 813 "domestic Gas Installations", the current Building Regulations and reference should be made to the current ETCI rules for electrical installation.

It is essential that the instructions in this booklet are strictly followed, for safe and economical operation of the boiler.

Electricity Supply

The appliance must be earthed.

Supply 230 V - 50 Hz. The fusing should be 3A.

This appliance is intended to be connected to the supply via a double-pole switch, having a 3mm contact separation in both poles, serving only the boiler and system controls. Alternatively, a 3-pin UNSWITCHED socket may be used.

Important Notes

- This appliance must not be operated without the casing correctly fitted and forming an adequate seal.
- If the boiler is installed in a compartment then the compartment MUST NOT be used for storage purposes.
- Under NO circumstances should any of the sealed components on this appliance be used incorrectly or tampered with.
- If it is known or suspected that a fault exists on the boiler then it MUST NOT BE USED until the fault has been corrected by a Gas SAfe Registered Engineer or in IE a Registered Gas Installer.
- This appliance is not intended for use by persons (including children) with reduced physical, sensory or mental capabilities, or lack of experience and knowledge, unless they have been given supervision or instruction concerning use of the appliance by a person responsible for their safety.
- Children should be supervised to ensure that they do not play with the appliance.

In cases of repeated or continuous shutdown a Gas Safe Registered Engineer or in IE a Registered Gas Installer should be called to investigate and rectify the condition causing this and carry out an operational test after each intervention on the device. Only the manufacturers original parts should be used for replacement.

Minimum Clearances

Clearances of **20mm (3/4"**) above, **5mm (1/4"**) at the sides and **450mm (17 3/4**") at the front of the boiler casing must be allowed for servicing.
The minimum front clearance allowed when built into a cupboard is 5mm.

To light the boiler **(Refer to Frame 1)**

1. CHECK THAT THE ELECTRICITY SUPPLY TO THE BOILER IS OFF.
2. Set the mains on/off switch (A) to off and the CH thermostat knob (B) to maximum.
3. Switch on the electricity supply to the boiler and check that all external controls, e.g. programmer, room stat, etc. are on.
4. Set the mains on/off switch to ON.

The boiler will commence the ignition sequence, supplying heat to the system when required.

Operation

In normal operation the control unit display (E) will show the codes:

O - Standby (no demand for heat)

C - CH or DHW being supplied

P - Boiler frost protection (boiler will fire when temperature is less than 3°C)

During *ignition* the LED (D) will flash.

During *normal running* the LED will remain illuminated.

Note. *If the boiler fails to light after 3 attempts the fault code 'L' 'F' will be displayed.*

Press and hold the reset button (C) for 2 seconds then release. The boiler will repeat the ignition sequence. If the boiler fails to light consult a Gas Safe Registered Engineer or in IE a Registered Gas Installer.

All Gas Safe Registered Engineers carry a Gas Safe Register ID card, and have a registration number. Both should be recorded in the **Benchmark** Commissioning Checklist. You can check your installer by calling Gas Safe Register direct on 0800 4085500.

Ideal Heating is a member of the Benchmark scheme and fully supports the aims of the programme. Benchmark has been introduced to improve the standards of installation and commissioning of central heating systems in the UK and to encourage the regular servicing of all central heating systems to ensure safety and efficiency.

THE BENCHMARK SERVICE INTERVAL RECORD MUST BE COMPLETED AFTER EACH SERVICE

benchmark
COLLECTIVE MARK
THE MARK OF QUALITY FOR THE INSTALLATION, COMMISSIONING AND SERVICING OF DOMESTIC HEATING AND HOT WATER SYSTEMS

Control of water temperature

The boiler controls the central heating radiator temperature to a maximum of 82ºC, adjustable via the CH thermostat knob (B).

Approx. CH flow temperatures for the boiler thermostat settings are:

Knob Setting	Flow Temperature ºC	ºF
Minimum	30	86
Maximum	82	180

To shut down the boiler

1. For short periods

Set the mains on/off switch (A) to OFF.

2. For longer periods

Set the mains on/off switch (A) to OFF. Switch the electricity supply to OFF. For longer periods the entire system should be drained, including the domestic hot water supply.

To relight the boiler

Repeat the procedure detailed in 'To light the boiler'.

Frost Protection

If no frost protection is provided and frost is likely during a short absence from home leave the heating controls (if fitted) at a reduced temperature setting.

For longer periods the entire system should be drained.

If the system includes a frost thermostat then, during cold weather, the boiler should be turned OFF at the time switch (if fitted) ONLY. The mains supply should be left switched ON, with the boiler thermostat left in the normal running position.

Boiler Overheat Thermostat

This thermostat will shut down the boiler in the event of overheating. Should this occur a fault code '*L-R*' will be displayed. Press the reset button (C) and the boiler will relight. If the fault recurs turn off the boiler and consult a Gas Safe Registered Engineer or in IE a Registered Gas Installer.

Flame failure

Should this occur a fault code '*L-F*' will be displayed. Press the reset button and the boiler will relight. If the fault recurs, turn off the boiler and consult a Gas Safe Registered Engineer or in IE a Registered Gas Installer.

Condensate Drain

This appliance is fitted with a siphonic condensate trap system that reduces the risk of the appliance condensate from freezing. However should the condensate pipe to this appliance freeze, please follow these instructions:

a. If you do not feel competent to carry out the defrosting instructions below please call your local Gas Safe Registered installer for assistance.

b. If you do feel competent to carry out the following instructions please do so with care when handling hot utensils. Do not attempt to thaw pipework above ground level.

If this appliance develops a blockage in its condensate pipe, the condensate will build up to a point where it will make a gurgling noise prior to locking out an "L2" fault code. If the appliance is reset it will make a gurgling noise prior to it locking out on a failed ignition "L2" code.

To unblock a frozen condensate pipe;

1. Follow the routing of the plastic pipe from its exit point on the appliance, through its route to its termination point.

   Locate the frozen blockage. It is likely that the pipe is frozen at the most exposed point external to the building or where there is some obstruction to flow. This could be at the open end of the pipe, at a bend or elbow, or where there is a dip in the pipe in which condensate can collect. The location of the blockage should be identified as closely as possible before taking further action.

2. Apply a hot water bottle, microwaveable heat pack or a warm damp cloth to the frozen blockage area. Several applications may have to be made before it fully defrosts. Warm water can also be poured onto the pipe from a watering can or similar. DO NOT use boiling water.

3. Caution when using warm water as this may freeze and cause other localised hazards.

4. Once the blockage is removed and the condensate can flow freely, reset the appliance (Refer to "To Light the boiler")

5. If the appliance fails to ignite, call your Gas Safe Registered engineer.

Preventative solutions

During cold weather, set the boiler stat to maximum, (Must return to original setting once cold spell is over)

Place the heating on continuous and turn the room stat down to 15ºC overnight or when unoccupied. (Return to normal after cold spell).

1 BOILER CONTROLS

Legend

A Boiler on/off switch

B CH thermostat knob

C Reset button

D LED

E Display

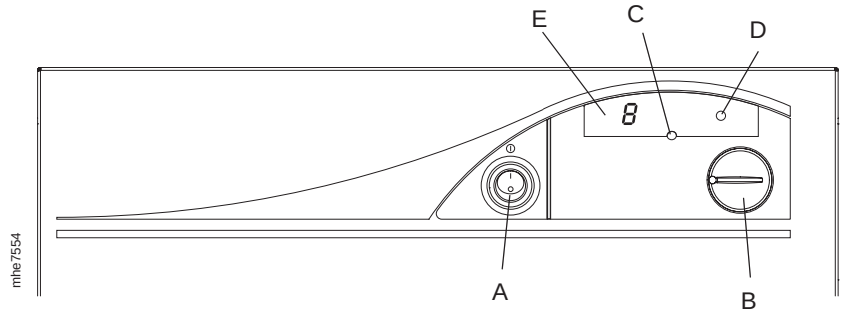

CAUTION. To avoid the possibility of injury during the installation, servicing or cleaning of this appliance care should be taken when handling edges of sheet steel components.

Escape of gas

Should a gas leak or fault be suspected contact your local gas supplier without delay.

Do NOT search for gas leaks with a naked flame.

Cleaning

For normal cleaning simply dust with a dry cloth.

To remove stubborn marks and stains use a damp cloth and mild detergent.

DO NOT use abrasive cleaning materials.

Maintenance

The appliance should be serviced at least once a year by a Gas SAfe Registered Engineer or in IE a Registered Gas Installer.

POINTS FOR THE BOILER USER

Note. *In line with our current warranty policy we would ask that you check through the following guide to identify any problems external to the boiler prior to requesting a service engineers visit. Should the problem be found to be other than with the appliance we reserve the right to levy a charge for the visit, or for any pre-arranged visit where access is not gained by the engineer.*

TROUBLESHOOTING - TYPICAL NON PRODUCT FAULTS

Problem	Solution
Boiler is not working for central heating or hot water.	• Check there is power to the boiler – switch (A) in the ON position and '0' displayed on the controls. • If '0' not displayed then not a boiler fault – contact your installer/service company. • Check external programmer is set to an 'ON' period and the relevant function selected i.e. central heating or domestic hot water. Test by overriding the programmer by setting to 'continuous. • Check room thermostat for central heating or the cylinder thermostat for domestic hot water, are set at the required temperature. To test operation of either thermostat turn fully up. If no response contact your installer.
Boiler is not working for central heating or hot water but attempts to fire by going through 3 ignition attempts. Display shows 'L:F' (flashing).	• Press reset button (C) for 2 seconds to repeat ignition sequence. • Check gas supply (try another appliance – cooker/fire etc.) – If no gas supply then not a boiler fault – contact gas supplier. • Check condensate pipe is not blocked or frozen. If blocked, clear blockage – if not possible to check contact your installer.
Boiler is not working for central heating or hot water and the display shows 'L:A' (flashing).	• Press reset button (C) for 2 seconds, the boiler should then re-light. If fault recurs this indicates an overheat condition. The boiler should be turned off and your installer contacted. • Check if **ALL** radiators have thermostatic radiator valves fitted. If they have contact your installer.
Boiler is not working for central heating or hot water and the display shows 'H:A' (flashing).	• Check if **ALL** radiators have thermostatic radiator valves fitted. If they have contact your installer.