ideal HEATING

INSTALLATION & MAINTENANCE

LOGIC AIR MONOBLOC HEAT PUMP SYSTEM

SCAN FOR:

Installation & Maintenance Guide

Schematics Guide

Halo Air Installation Manual

When replacing any part on this appliance, use only spare parts that you can be assured conform to the safety and performance specification that we require. Do not use reconditioned or copy parts that have not been clearly authorised by Ideal Heating.

For the very latest copy of literature for specification and maintenance practices visit our website idealheating.com where you can download the relevant information in PDF format.

10 / 2026
UIN 252130 A02

NOTES FOR THE INSTALLER

For any technical queries please contact the Ideal installer helpline : 01482 498663
For ROI : 00353 (0)1 961 7700

WEEE DIRECTIVE 2012/19/EU
Waste Electrical and Electronic Equipment Directive

- At the end of the product life, dispose of the packaging and product in a corresponding recycle centre.
- Do not dispose of the unit with the usual domestic refuse.
- Do not burn the product.
- Remove the batteries.
- Dispose of the batteries according to the local statutory requirements and not with the usual domestic refuse.

benchmark COLLECTIVE MARK
THE MARK OF QUALITY FOR THE INSTALLATION, COMMISSIONING AND SERVICING OF DOMESTIC HEATING AND HOT WATER SYSTEMS

The code of practice for the installation, commissioning& servicing of central heating systems

NOTE TO INSTALLER: COMPLETE THE BENCHMARK COMMISSIONING CHECKLIST AT THE REAR OF THIS BOOK AND LEAVE THESE INSTRUCTIONS WITH APPLIANCE

Ideal Heating reserve the right to vary specification without notice

CONTENTS

Section 1 - General 5
1.1 Literature Symbols 5
1.2 Documentation 5
1.3 General Safety Instructions 5
1.3.1 Risks and Warning 5
1.3.2 Installer Qualification 6
1.3.3 Appliance Symbols 6
1.3.4 Intended Use 6
1.4 Regulations 6
1.5 System Configurations 7

Section 2 - Product Information 8
2.1 ERP Data 8
2.2 Heat Pump 8
2.2.1 Dimensions and Clearances 9
2.3 DHW Cylinders 10
2.3.1 Single Zone Pre-plumbed Cylinders Dimensions 11
2.3.2 Two Zone Pre-Plumbed Cylinders with Integrated Low Loss Header Dimensions 13
2.3.3 Single Zone Pre-Plumbed Cylinder with Integrated Buffer Dimensions 15
2.3.4 Two Zone Pre-Plumbed Cylinder with Integrated Buffer Dimensions17
2.3.5 Installation in Enclosed Areas 18
2.3.6 Single Zone Pre-Plumbed Slimline Duo Cylinder 19
2.4 Control Box 20
2.4.1 Control Box Dimensions and Clearances 20
2.5 Contents Provided with Appliance 21
2.5.1 Monobloc Heat Pump 21
2.5.2 DHW Cylinders 21
2.5.3 Control Box 21
2.6 Location of Data Plates 22
2.6.1 Heat Pump 22
2.6.2 DHW Cylinder 22
2.6.3 Control Box 22
2.7 Heat Pump Operating Principles 23
2.7.1 Operating Principle 23
2.7.2 Defrost Method 23
2.7.3 Domestic Hot Water 23
2.7.4 Space Heating 23
2.7.5 Anti-Legionella Function 23
2.7.6 Cold Start Function 24
2.7.7 Frost Protection 24

Section 3 - Pre-Installation Checks 25
3.1 System Combinations 25
3.2 Primary Heating System Requirements 25
3.2.1 Minimum System Volume of the Primary Heating Circuit 25
3.2.2 System Expansion 25
3.2.3 Maximum Pipe Length 26
3.2.4 Water Quality Requirements 26
3.2.5 System Water Antifreeze Protection 26
3.3 Heat Pump - Installation Area 26
3.3.1 Installation Environment 27
3.3.2 Orientation 27
3.3.3 Mounting 27
3.3.4 Pressure Relief Valve Discharge Outlet 27
3.4 Cylinder - Installation Area 28
3.4.1 Product Location Considerations 28
3.5 Water Supply Requirements 28
3.6 Control Box - Installation Area 29
3.6.1 Product Dimensions and Installation Clearances 29
3.6.2 Determining Installation Area 29
3.6.3 Requirements of Installation Area 29

Section 4 - Installation 30
4.1 Installation of Heat Pump 30
4.1.1 Preparation of Installation Area 30
4.1.2 Floor Mounting 30
4.1.3 Receival and Unpacking 31
4.1.4 Lifting and Handling 31
4.1.5 Condensate Disposal 32
4.1.6 Hydronic Connections 33
4.1.7 Accessing the Casing 34
4.1.8 Electrical Installation 34
4.1.9 Routing the Electrical Cables 35
4.2 Installation of Indoor DHW Cylinder 36
4.2.1 Receival and Unpacking 36
4.2.2 Lifting and Handling 36
4.2.3 Hydronic Connections 37
4.2.4 Pressure and Temperature/Expansion Relief Valve Pipework 38
4.2.5 Immersion Heater Wiring 39
4.3 Installation of Control Box 40
4.3.1 Receival and Unpacking and Handling 40
4.3.2 Removal of the Front Panel 40
4.3.3 Mounting 41
4.3.4 Electrical Installation 41
4.3.5 Control Box Internal Wiring 42
4.3.6 Contactor Diagram 43
4.3.7 Installer Wiring Connections 43
4.3.8 Electrical Safety Test 45
4.4 Installation of System 45
4.5 Hybrid Systems 46
4.5.1 Electrical Installation 46
4.5.2 Controller Setup 46

Section 5 - Commissioning 47
5.1 Pre-Commissioning Checklist 47
5.2 Commissioning of Hydronic Circuit 47
5.2.1 Flushing out the Hydronic Circuit 47
5.2.2 System Water Treatment 47
5.3 Filling the System 49
5.4 System Air Venting 49
5.5 Activation of System - Quick Setup 50
5.6 Default System Parameters 51
5.7.1 Initial Heat Delivery 53
5.7 Heat Pump Control setup 53
5.7.2 Menu Operation 54
5.7.3 Logic Air, Zone 1 Halo, Zone 2 On/Off Room Stat 65
5.7.4 Weather Compensation Variants 66

Section 6 - Inspection and Maintenance 68
6.1 Overall Maintenance Plan Table 68
6.2 Heat Pump Service & Maintenance Procedure 69
6.2.1 Logic Air Monobloc Heat Pump Checks 69
6.2.2 Logic Air Controller Checks 70
6.2.3 Logic Air Domestic Hot Water Cylinder and System Checks 70
6.2.4 Service Records 70
6.2.5 Fault History 71
6.2.6 Update the Settings 71

Section 7 - De-Commissioning 72
7.1 De-Commissioning 72

Section 8 - Recycle & Disposal 73
8.1 Packaging 73
8.2 End of Product Life 73
8.2.1 Environmental Protection 73
8.2.2 WEEE 73
8.2.3 Environmental Disposal 73

Section 9 - Fault Finding 74
9.1 Fault Help 74
9.1.1 Fault Codes 74
9.1.2 Outside Sensor Fault 75
9.1.3 Header Thermistor Fault (used for Cascade Systems) 75
9.1.4 Flow Thermistor (Outdoor) Fault 75
9.1.5 Flow Thermistor (Indoor) Fault 76
9.1.6 Return Thermistor Fault 76
9.1.7 DHW Thermistor Fault 76
9.1.8 Room Thermostat 1 Fault 77
9.1.9 Room Thermostat 2 Fault 77
9.1.10 LPB (Cascade) Short-Circuit/Communication Fault 77
9.1.11 LPB (Cascade) Address Collision Fault 78
9.1.12 BSB Short Circuit Fault 78
9.1.13 BSB Address Collision Fault 78
9.1.14 2 Clock Time Masters Fault 79
9.1.15 Clock Without Back-up Fault 79
9.1.16 Source Temperature too Low Fault 79
9.1.17 7093 DHW Setpoint Fault 79
9.1.18 Anti-Legionella Temperature Fault 80
9.1.19 Re-occurring Heat Pump Fault 80

9.1.20 Configuration Fault ... 80
9.1.21 Alarm Contact 1 Active Fault ... 81
9.1.22 Room Temperature Sensor Fault ... 81
9.1.23 External Fault ... 81
9.1.24 Low Mains Voltage Fault ... 82
9.1.25 No Cascade Master Fault ... 82
9.1.26 No Outdoor Connection Fault ... 82
9.1.27 Back-up Boiler no Temperature Rise Fault ... 83
9.1.28 Number of Heat Pump Starts Exceeded ... 83
9.1.29 No Central Heating but Hot Water works OK ... 83
9.1.30 No Hot Water but Central Heating works OK ... 84
9.1.31 No Display on Indoor Unit ... 84

Appendix ... 85
1.1 System Schematics ... 85
1.1.1 Schematics Key/Legend ... 85
1.1.2 Logic Air + Two Zone Pre-Plumbed Cylinder with Integrated Buffer86
1.1.3 Logic Air + Single Zone Pre-Plumbed Cylinder ... 87
1.1.4 Logic Air + Two Zone Pre-plumbed Cylinder with Integrated Low Loss Header ... 88
1.1.5 Pump Pressure Curves ... 89
1.1.6 Refrigerant Circuit ... 90

TABLES

Table 1 Data - Heat Pump ... 8
Table 2 Data - Single Zone Pre-plumbed Cylinders ... 10
Table 3 Data - Two Zone Pre-plumbed Cylinders with Integrated Low Loss Header ... 12
Table 4 Data - Single Zone Pre-plumbed Cylinder with Integrated Buffer ... 14
Table 5 Data - Two Zone Pre-plumbed Cylinder with Integrated Buffer ... 16
Table 6 Data - Single Zone Slim Line Pre-Plumbed Cylinder with Integrated Buffer Dimensions ... 18
Table 7 Data - Control Box ... 20
Table 8 Content provided with DHW Cylinders ... 21
Table 9 System Specification ... 25
Table 10 Sizing of Copper Discharge Pipe ... 38
Table 11 Control Box Parameters ... 47
Table 12 Pre-Commissioning Checklist ... 48
Table 13 Glycol Concentration vs Expected Min. Outdoor Temp. ... 49
Table 14 Glycol Concentration vs Performance ... 49
Table 15 Default System Parameters ... 52
Table 16 Maintenance Tasks ... 69

FIGURES

Figure 1. System Configurations ... 7
Figure 2. Heat Pump - Dimensions ... 9
Figure 3. Heat Pump - Clearances ... 9
Figure 4. Logic Air DHW pre-plumbed slimline cylinder 180L & control box 1-zone ... 11
Figure 5. Logic Air DHW pre-plumbed cylinder 180L & control box 1-zone ... 11
Figure 6. Logic Air DHW pre-plumbed slimline cylinder 210L, control box & low loss header 2-zone ... 13
Figure 7. Logic Air DHW pre-plumbed cylinder 250L, control box & low loss header 2-zone ... 13
Figure 8. Logic Air DHW pre-plumbed cylinder 210L, control box & buffer 1-zone ... 15
Figure 9. Logic Air DHW pre-plumbed cylinder 300L, control box & buffer 1-zone ... 15
Figure 10. Logic Air DHW pre-plumbed cylinder 210L, control box & buffer 2-zone17
Figure 11. Logic Air DHW pre-plumbed cylinder 300L, control box & buffer 2-zone17
Figure 12. Logic Air DHW pre-plumbed slimline cylinder 150L, control box & buffer 1-zone ... 19
Figure 13. Logic Air DHW pre-plumbed slimline cylinder 180L, control box & buffer 1-zone ... 19
Figure 14. Control Box - Dimensions ... 20
Figure 15. Control Box - Clearances ... 20
Figure 17. DHW Cylinder - Location of Data Plates ... 22
Figure 18. Control Box - Location of Data Plates ... 22
Figure 16. Heat Pump - Location of Data Plates ... 22
Figure 19. Closed Refrigerant Circuit ... 23
Figure 20. Installation Location ... 27
Figure 21. Heat Pump Base Panel Outlets (all models) ... 27
Figure 22. Dimensions of Mounting Fixtures (all models) ... 30
Figure 23. Hand Holds (Rear/Side) ... 31
Figure 24. Hand Holds (Side) ... 31
Figure 25. Heat Pump Permeable Base Installation ... 32
Figure 26. Heat Pump Base Panel Outlets (all models) ... 32
Figure 27. Primary Heating Connections ... 33
Figure 28. Heat Pump - Panel Removal ... 34
Figure 29. Routing the Cables ... 35
Figure 30. Connections to Heat Pump Terminal Block 8/10 kW model ... 35
Figure 31. Connections to Heat Pump Terminal Block 4/5 kW models ... 35
Figure 32. Typical Discharge Pipe Arrangement ... 38
Figure 33. Immersion Heater Wiring ... 39
Figure 34. Front Panel Removal ... 40
Figure 35. Front Panel Mounting ... 41
Figure 36. Control Box - Internal Wiring ... 42
Figure 38. Installer Wiring Connections ... 43
Figure 37. Contactor Diagram ... 43
Figure 39. Typical Antifreeze Valve ... 48
Figure 40. Antifreeze Installation Recommendations ... 48
Figure 41. Auto Air Vent Dust Cap ... 49
Figure 42. Logic Air Zone 1 Halo, Zone 2 On/Off Room Stat ... 65
Figure 43. Logic Air Compensation Curves vs Flow Temperature Settings Available ... 66
Figure 44. Weather Compensation with Room Influence (example at gradient 0.5) ... 67
Figure 45. Heat Pump - Side Panel Removal ... 69
Figure 46. Front Panel Removal ... 70
Figure 47. Refrigerant Circuit Diagram ... 90

1.1 LITERATURE SYMBOLS

⚠ WARNING: Risk of injury or death.

⚠ CAUTION: Risk of damage to objects.

ⓘ IMPORTANT: Notes to make you aware.

1.2 DOCUMENTATION

This is an original manual and must not be modified or translated without the expressed permission of Ideal Heating.

This document applies to the installation and maintenance of the following individual and combined products when installed in the United Kingdom & Republic of Ireland:

- Logic Air Monobloc Heat Pump
- Logic Air Control Box
- Logic Air Single Zone Preplumbed Cylinder
- Logic Air Two Zone Preplumbed Cylinder with low loss header
- Logic Air Preplumbed Cylinder with Integrated Buffer (single or two zone)

The document is to be used for reference on installation and maintenance of these systems by heating system installers, refrigeration engineers, and electricians.

This information is provided to assist in the selection of equipment. Responsibility for selection and specification of our equipment is that of the customer, expert or consultant concerned with the installation.

All instructions must be left with the user. It must be communicated to the user that these documents are to be safely stored for future service records.

This document is to be used in combination with the below documents:

SCAN
for Logic Air Maintenance Manual

SCAN
for Schematics Guide

1.3 GENERAL SAFETY INSTRUCTIONS

Prior to installation and maintenance of the product, make sure that:

- General safety instructions are read and understood.
- There is an awareness of relevant regulations and guidelines, and that they are obeyed.
- Sections specific to the work to be undertaken are read.
- Work performed is correctly documented.

1.3.1 Risks and Warning

⚠ WARNING: Failure to obey the warnings below can result in death or severe injury. Detailed hazardous events and how to prevent them are presented in their relevant sections throughout the document.

Flammable Refrigerant

- The Heat Pump is charged with R32 which is a mildly flammable, odourless, and colourless refrigerant. In the event of a leak from the refrigerant circuit this can create a hazardous environment. To reduce the risk of a hazardous event, the installation instructions should be followed, and the installation area should be kept clear of ignition sources, including but not limited to; electrical switches, electrical plug sockets, and lamps.

Transport & Storage of Boxed Unit

- The heat pump must be transported and stored in an upright position. When still in the packaging, the product and surrounding area should be kept clear of ignition sources and should be handled with caution.

Installation & Safety Devices

- If the installation requirements of this document are not upheld there is increased risk of a hazardous event occurring. All pre-installation checks and the specific installation requirements of each individual product and the system must be implemented and obeyed.

Modification of the Products and Installation Environment.

- The product is not to be modified or tampered with in any way that is not defined and approved by this document. Make sure that the requirements for both the products and installation environments are always followed. The end user should be properly informed of the installation area and product requirements during the handover process.

Improper Maintenance

- The product is to be regularly maintained and serviced by an appropriately qualified service engineer. The end user should be properly informed of maintenance and care requirements during the handover process.

Inappropriate Operation

- The product is to be operated as outlined in both this document and the user manuals. The end user must be properly informed of intended and acceptable operation methods during the handover process.

Electrical Risk

- Work on electrical components must only be carried out by a competent electrician. Electrical supplies must be locked in the off position when any work is done near electrical components. Failure to comply with this requirement can result in severe injury or death.

  If any of the supply cables are damaged, they must be replaced by the manufacturer, its service agent or similarly qualified persons in order to avoid a hazard.

Correct Disposal of Waste

- Waste from the products, such as cardboard, plastics, and refrigerant must be disposed of appropriately and recycled where applicable. Refrigerant must not be released into the atmosphere.

Presence of Frozen Condensate in Walkways

- There is condensate produced by the Heat Pump which can potentially build up around the heat pump and freeze if not properly disposed of. Appropriate disposal methods of the condensate should be implemented and maintained to prevent slipping hazard.

Manual Handling

- Operatives should be knowledgeable and capable of safe manual handling techniques. Health and safety guidelines should be followed in combination with the individual 'Lifting and Handling' section of each individual unit. Caution should be practised at all times and when it is practicable, the use of manual handling equipment should be implemented

1.3.2 Installer Qualification

⚠ WARNING: Work on the refrigeration circuit must only be carried out by a competent engineer with a current Cat III, Cat II or Cat I F-Gas certificate.

⚠ WARNING: Work on electrical systems must only be carried out by competent persons.

⚠ WARNING: The DHW Cylinder must be installed by a competent person as defined by the relevant regulations. Manufacturers notes must NOT be taken as over-riding statutory obligations.

Work that requires the removal of the exterior casing of the Heat Pump must only be carried out by competent persons who are familiar with the risks of R32 refrigerant.

1.3.3 Appliance Symbols

Safety labels are affixed to several points on these products. These warning labels also include rules of conduct for the R32 refrigerant. The warning labels must not be removed.

Symbol	Meaning
	Flammable refrigerant
	At the end of the product life, dispose of the packaging and product in a corresponding recycle centre.
	Read the operating manual.
	Read the installation manual.
	Read the installation and operating manual.

1.3.4 Intended Use

The correct usage of products is specified within this document and must be obeyed.

⚠ WARNING: Failure to comply with the requirements stipulated within this documentation may result increased risk of death, serious injury and/or damage to equipment and property.

The Heat Pump is an air-to-water monobloc heat pump to be installed in a domestic household with a closed loop heating system. This heat pump does not provide a cooling function.

The Heat Pump takes heat from ambient outdoor air for transfer into domestic hot water or a space heating system. This air is not to be ducted or re utilised and must be allowed to flow freely back into the natural environment.

The DHW cylinder is used to transfer heat from the Heat Pump into domestic hot water storage systems. The DHW cylinder is to be installed within a domestic household.

The control box is to be installed as this contains the control system and installer interfaces needed for the initial setup and commissioning of the overall heating system. A limited interface is provided for the end user however it is envisaged that day to day interface will be via a PRT i.e., Halo Air.

It is recommended that on/off room thermostats are not installed with this product as they may negatively affect system performance and provide no optimisation potential.

If the Halo Air is not installed as the programmable room thermostat and an alternative Programmable Room Thermostat (PRT) is used the following basic functionality must be provided:

- Setback Temperature with a maximum 3C below comfort temperature.
- Heating Schedule with a minimum 2.5-hour optimisation.
- The Logic Air Control must be set to permanent comfort mode.
- Maximum cycle rate of 1 per hour.

Installations must conform to the schematics in *Appendix 1.1*. It is the responsibility of the installer to make sure that all appropriate measures are implemented including appropriate safety devices.

The installation must comply with all accompanying documentation and applicable local regulations and guidelines.

1.4 REGULATIONS

Installations must conform with the regulations of the installation site:

- F-gas regulation.
- National building regulation.
- Local regulations and provisions of local electricity suppliers.
- IET Wiring regulations.
- Water fittings regulations (Water bye-laws in Scotland).

Detailed recommendations are contained in the following British Standards Codes of Practice. Listed below are the editions of the standards at the time of publication, it should be made sure that the current editions at the time of installation are used for reference.

BS EN 378:2016	Refrigerating systems and heat pumps. Safety and environmental requirements.
BS EN 1717:2000	Protection against pollution of potable water in water installations and general requirements of devices to prevent pollution by back flow
BS 7593:2019	Code of practice for the preparation, commissioning and maintenance of domestic central heating and cooling water systems
BS 7671:2018 +A2:2022	Requirements for Electrical Installations. IET Wiring Regulations
BS EN 14336:2004	Heating systems in buildings. Installation and commissioning of water-based heating systems.
BS EN 15450:2007	Heating systems in buildings. Design of heat pump heating systems.
BS EN 50160:2010 +A3:2019	Voltage characteristics of electricity supplied by public electricity networks View details
BS EN 12828:2012 +A1:2014	Heating systems in buildings. Design for water-based heating systems.
BS EN 12831-1:2017	Energy performance of buildings. Method for calculation of the design heat load. Space heating load, Module M3-3
BS 8558:2015	Guide to the design, installation, testing and maintenance of services supplying water for domestic use within buildings and their curtilages. Complementary guidance to BS EN 806
BS EN 806-1:2000	Specifications for installations inside buildings conveying water for human consumption. General
BS EN 12897:2016 (+A1:2020)	Water supply - specification for indirectly heated unvented (closed) storage water heaters

1.5 SYSTEM CONFIGURATIONS

The basic Logic Air Monobloc Heat Pump System configurations are illustrated in *Figure 1*.

For further information on available Logic Air accessories such as HALO wireless Smart Thermostat, please refer to Section 3.1 System Combinations on page 25.

For further information on Logic Air Cylinder and associated component options, please refer to *Table 8 in* Section 2.5.2 DHW Cylinders on page 21.

For further information on appliance package contents, please refer to Section 2.5 Contents Provided with Appliance on page 21.

Option 1:

Logic Air Monobloc Air Source Heat Pump
+
Logic Air Pre-Plumbed Cylinder
+
Halo Air Wi-Fi/RF

Option 2:

Logic Air Monobloc Air Source Heat Pump
+
Logic Air Control Box
+
Heat Pump DHW Cylinder
+
Buffer Tank
+
Halo Air (Wi-Fi / RF)

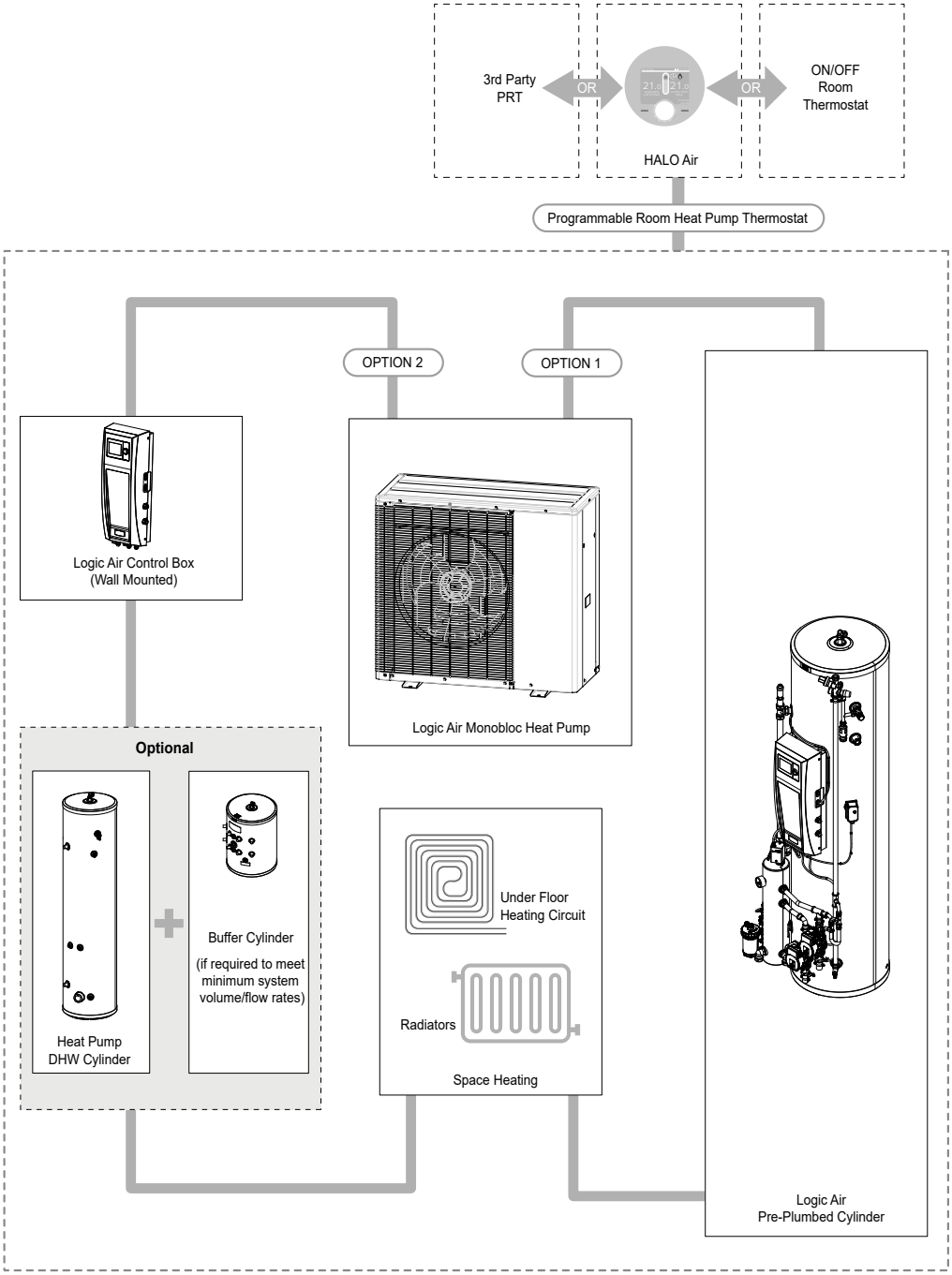

Figure 1. System Configurations

ⓘ **IMPORTANT: The following performance data is only applicable to brand new products**

2.1 ERP DATA

Applicable ErP energy efficiency labels are supplied with each of the products. A separate ErP product fiche document is provided with the Logic Air Heat Pump. If a Logic Air Cylinder product is installed, refer to *Table 2* to *Table 4* within this document for the cylinder product fiche.

2.2 HEAT PUMP

Table 1 Data - Heat Pump

Description	Unit	4kW Logic Air	5kW Logic Air	8kW Logic Air	10kW Logic Air
Physical Properties					
Packaged Weight - Gross (Unpackaged Weight (Net))	kg	96 (86)	96 (86)	123 (110)	123 (110)
Height (Unpackaged)	mm	980 (798)	980 (798)	1190 (1008)	1190 (1008)
Width (Unpackaged)	mm	1175 (1095)	1175 (1095)	1175 (1095)	1175 (1095)
Depth (Unpackaged)	mm	600 (521)	600 (521)	600 (518)	600 (518)
Performance Data					
Coefficient of Performance (A+7 at W35 / W55)	*COP*	*5.34 / 3.00*	*5.15 / 3.04*	5.19 / 3.05	4.88 / 2.98
Coefficient of Performance (A-7 at W35 / W55)	*COP*	*3.21 / 2.01*	*3.13 / 2.13*	3.19 / 2.14	3.12 / 2.14
Seasonal Coefficient of Performance (W35 / W55)	*SCOP*	*4.96 / 3.48*	*5.07 / 3.65*	5.16 / 3.70	5.19 / 3.73
Sound Power Level *	*dB (A)*	52	52	55	55
Sound Pressure Level @ 1m / 3m / 5m	dB (A)	44 / 34.5 / 30	44 / 34.5 / 30	47 / 37.5 / 33	47 / 37.5 / 33
Maximum Outdoor Temperature	°C	35	35	35	35
Minimum Outdoor Temperature	°C	-20	-20	-20	-20
Heat Output					
A+7°C/W+35°C	kW	4.0	5.0	8.0	10
A+7°C/W+55°C	kW	4.0	5.0	8.0	10.0
A-7°C/W+35°C	kW	4.1	5.1	8.2	9.53
A-7°C/W+55°C	kW	3.7	4.8	7.5	8.5
Electrical Properties					
Electrical Supply Requirements					
Rated Supply Voltage	V	230	230	230	230
Frequency	Hz	50	50	50	50
No. of Supply Phases	-	Single	Single	Single	Single
Maximum Current	A	13.1	14.6	19.1	20.6
Fuse Rating	A	16	16	25	25
Outdoor Unit Properties					
IP Rating	-	X4	X4	X4	X4
Compressor Control Type	-	Inverter	Inverter	Inverter	Inverter
Electrical Power Consumption					
A+7°C/W+35°C	kW	0.75	0.97	1.54	2.05
A+7°C/W+55°C	kW	1.33	1.64	2.62	3.36
A-7°C/W+35°C	kW	1.28	1.63	2.56	3.05
A-7°C/W+55°C	kW	1.84	2.25	3.50	3.97
Heating Circuit Requirements					
Hydronic Connections	“	1” BSP Male	1” BSP Male	1” BSP Male	1” BSP Male
Maximum Operating Pressure	bar	3	3	3	3
Minimum Flow Rate of the Hydronic Circuit	l/min	8.5	8.5	14.5	14.5
Maximum Flow Temperature	°C	60	60	60	60
Minimum Operating Water Temperature (without pre-heating)	°C	17	17	17	17
Minimum Primary System Volume	L	Refer to Primary Heating System Requirements	Refer to Primary Heating System Requirements	Refer to Primary Heating System Requirements	Refer to Primary Heating System Requirements
Hydraulic Resistance	-	Refer to Pump Curves	Refer to Pump Curves	Refer to Pump Curves	Refer to Pump Curves
Refrigerant Data					
Refrigerant	-	R32	R32	R32	R32
Factory Refrigerant Charge	grams	880	880	1,470	1,470
GWP Rating	-	675	675	675	675
ODL Rating	-	0	0	0	0
Flammability Rating	-	A2L	A2L	A2L	A2L
Maximum Circuit Pressure	bar	42	42	42	42
Compressor Type	-	Twin Rotary	Twin Rotary	Twin Rotary	Twin Rotary
Compressor Oil	-	RmM68	RmM68	RmM68	RmM68

* Tested in accordance with EN 12102-1 Annex A

2.2.1 Dimensions and Clearances

⚠ **CAUTION: The product is not to be obstructed by any surrounding objects or surfaces as this can limit access and adversely affect performance. The minimum clearances that are shown in *Figure 3* should be always maintained**

	A	B	C	D	E	F	G	H	I	J	K	L	M	N	O	P
4/5 kW	798	518	1095	499	518	558	688	516	80	184	140	95	84	48	90	103
8/10 kW	1008	518	1095	499	518	558	688	516	80	184	140	95	84	48	90	105

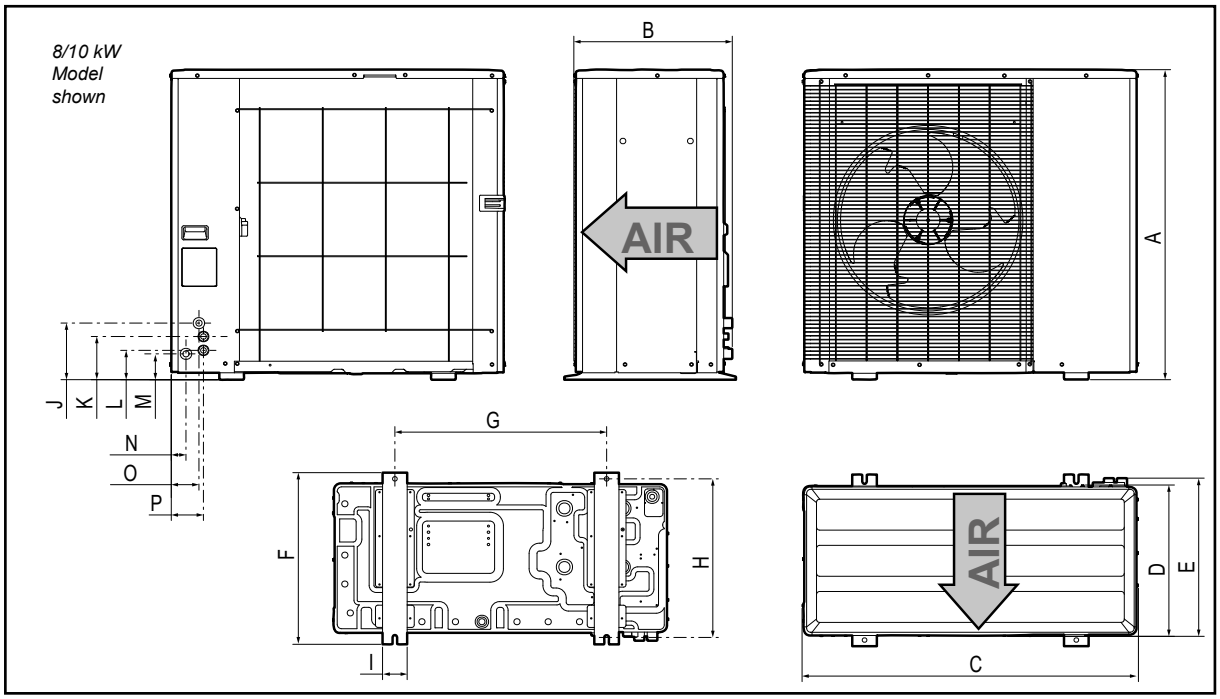

Figure 2. Heat Pump - Dimensions

ⓘ **IMPORTANT: Dimensions shown below are the minimum required to satisfy the Heat Pump air flow requirements. Consideration must be given to individual installation, service and maintenance requirements.**

A ≥ 100 mm
B ≥ 150 mm
C ≥ 200 mm
D ≥ 300 mm
E ≥ 400 mm
F ≥ 500 mm
G ≥ 600 mm

H ≥ 1000 mm
J ≥ 1500 mm
K ≥ 3000 mm
L ≥ 3500 mm
M = 300 mm Max
N = 500 mm Max

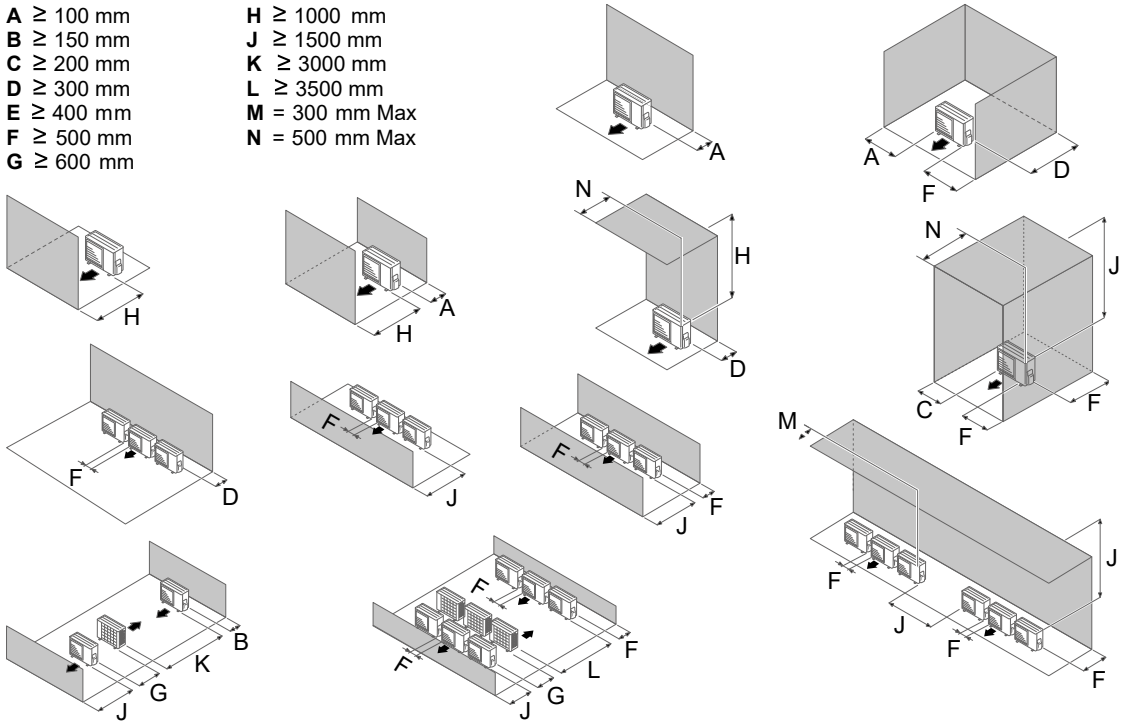

Figure 3. Heat Pump - Clearances

2.3 DHW CYLINDERS

Table 2 Data - Single Zone Pre-plumbed Cylinders

		Logic Air Single zone Pre-plumbed cylinders							
General Description		150, 180; litre; 475mm & 550mm diameter; single coil cylinders intended for coupling with a range of heat pumps 5kW to 14kW; Pre-plumbed and pre-wired including control box. Intended for a single zone heating system installation.							
Assembly Model code/number		**Logic Air DHW pre-plumbed slimline cylinder 150L & control box 1-zone**		**Logic Air DHW pre-plumbed slimline cylinder 180L & control box 1-zone**		**Logic Air DHW pre-plumbed cylinder 150L & control box 1-zone**		**Logic Air DHW pre-plumbed cylinder 180L & control box 1-zone**	
Assembly UIN			**236203**		**236204**		**236198**		**236199**
Cylinder model code/number			**IDEPLUHP-150PPSZSL**		**IDEPLUHP180PPSZSL**		**IDEPLUHP150PPSZ**		**IDEPLUHP180PPSZ**
Energy Efficiency Class			B		C		B		B
Heat Loss	Watts		50		58		44		49
	kWh/24h		1.21		1.40		1.07		1.18
Capacity (DHW content)	Litres		145		169		148		170
Volume heated by immersion heater	Litres		134		165		127		157
Weight Empty	kg		46		53		44		48
Weight Full	kg		192		222		192		219
Pressure Reducing valve setting	bar		3		3		3		3
Expansion relief valve setting	bar		4.5		4.5		4.5		4.5
Temperature setting of TPRV	°C		95		95		95		95
Pressure setting of TPRV	bar		6		6		6		6
Potable Expansion Vessel size.	Litres		18		18		18		18
Expansion Vessel charge	bar		3		3		3		3
Overall Width	mm		581		581		636		636
Overall Height	mm		1598		1870		1196		1384
Overall Depth	mm		606		606		683		683
Cylinder Diameter	mm	A	475	A	475	A	550	A	550
DHW outlet	mm	B	1579	B	1851	B	1177	B	1365
Cylinder Height	mm	C	1519	C	1791	C	1118	C	1306
TPRV port	mm	D	1292	D	1564	D	875	D	1063
Manual reset overheat thermostat pocket	mm	E	1051	E	1151	E	673	E	673
Primary flow	mm	F	544	F	544	F	544	F	544
Secondary return port	mm	G	-	G	-	G	-	G	-
Thermistor pocket	mm	H	668	H	759	H	532	H	584
Primary return	mm	J	95	J	95	J	95	J	95
Immersion heater pocket	mm	K	230	K	230	K	230	K	230
Cold water inlet	mm	L	1516	L	1788	L	1099	L	1287
Cylinder Drain	mm	M	220	M	220	M	220	M	220
CH1 Flow	mm	N	479	N	479	N	479	N	479
CH2 Flow (n/a to SZ version)	mm	P	-	P	-	P	-	P	-
CH Return	mm	Q	95	Q	95	Q	95	Q	95
Buffer Connections	mm	R	-	R	-	R	-	R	-
Buffer Inspection	mm	S	-	S	-	S	-	S	-
Buffer Drain	mm	T	-	T	-	T	-	T	-
Primary heat exchanger surface area	m2		1.8		3.0		1.6		2.5
Primary heat exchanger capacity	Litres		6.4		10.6		5.6		8.5
HWA Heat pump Test	-		-		-		-		-
Primary heat exchanger thermal rating	kW		15.2		20.7		13.1		17.8
Heat up time from 10°C to 50°C	min		22.3		21.8		22.6		22.6
V40	Litres		158.9		205.0		139.8		186.0
BS EN 12897 Test	-		-		-		-		-
Primary heat exchanger thermal rating	kW		33.2		39.3		25.7		32.8
Primary heat exchanger pressure loss	bar		0.082		0.048		0.061		0.095
Heat up time from 10°C to 60°C	min		13.9		15.8		16.4		17.6
V40	Litres		215.7		291.0		198.2		270.0
Revision Level			D8.2		D8.2		D8.2		D8.2

Heat Up Time, HWA Heat Pump Test 002:2020 (flow rate 0.42l/s and flow temperature of 55°C)
Heat Up Time, BS EN 12897, G3 Performance Test (flow rate of 0.25l/s / 80°C).
The relative heat up times stated are based on the tests referenced above and carried out on all cylinders within the range. The stated test value may not reflect real life performance within a residential environment.

2.3.1 Single Zone Pre-plumbed Cylinders Dimensions

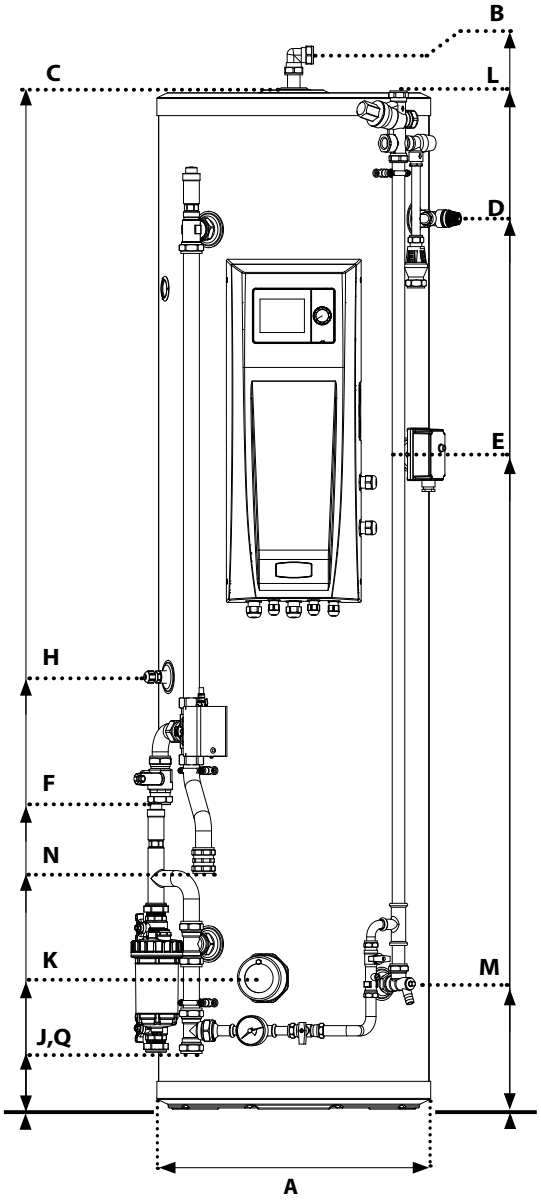

Figure 4. Logic Air DHW pre-plumbed slimline cylinder 180L & control box 1-zone

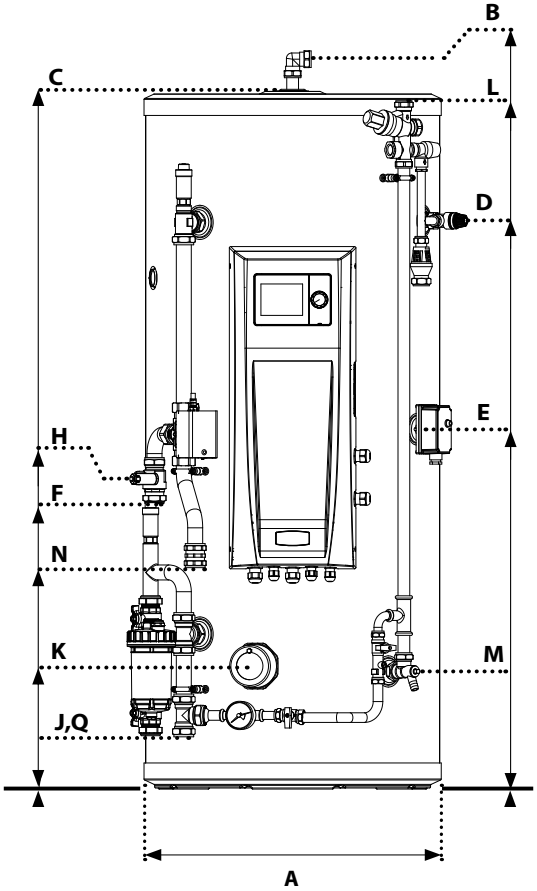

Figure 5. Logic Air DHW pre-plumbed cylinder 180L & control box 1-zone

Table 3 Data - Two Zone Pre-plumbed Cylinders with Integrated Low Loss Header

		Two zone Pre-plumbed Cylinders with integrated low loss header							
General Description		210, 250 & 300 litre; 475mm & 550mm diameter; single coil cylinders intended for coupling with a range of heat pumps 5kW to 14kW; Pre-plumbed and pre-wired including control box. Intended for a dual zone heating system installation. A low loss header is supplied fitted to decouple the heat pump from the heating zones.							
Assembly Model code/number			**Logic Air DHW pre-plumbed slimline cylinder 210L, control box & low loss header 2-zone**		**Logic Air DHW pre-plumbed cylinder 210L, control box & low loss header 2-zone**		**Logic Air DHW pre-plumbed cylinder 250L, control box & low loss header 2-zone**		**Logic Air DHW pre-plumbed cylinder 300L, control box & low loss header 2-zone**
Assembly UIN			**236205**		**236200**		**236201**		**236202**
Cylinder model code/number			**IDEPLUHP210PPDZSL**		**IDEPLUHP210PPDZ**		**IDEPLUHP250PPDZ**		**IDEPLUHP300PPDZ**
Energy Efficiency Class			C		B		C		C
Heat Loss	Watts		65		55		63		72
	kWh/24h		1.55		1.33		1.52		1.74
Capacity (DHW content)	Litres		188		199		237		279
Volume heated by immersion heater	Litres		184		177		227		267
Weight Empty	kg		60.6		64		69.8		73.4
Weight Full	kg		248.9		262.8		307		352.4
Pressure Reducing valve setting	bar		3		3		3		3
Expansion relief valve setting	bar		4.5		4.5		4.5		4.5
Temperature setting of TPRV	°C		95		95		95		95
Pressure setting of TPRV	bar		6		6		6		6
Potable Expansion Vessel size.	Litres		24		24		24		35
Expansion Vessel charge	bar		3		3		3		3
Overall Width	mm		647		704		704		704
Overall Height	mm		2042		1572		1822		2068
Overall Depth	mm		620		686		686		686
Cylinder Diameter	mm	A	475	A	550	A	550	A	550
DHW outlet	mm	B	2023	B	1553	B	1803	B	2049
Cylinder Height	mm	C	1963	C	1494	C	1744	C	1990
TPRV port	mm	D	1737	D	1252	D	1502	D	1748
Manual reset overheat thermostat pocket	mm	E	1151	E	1051	E	1150	E	1150
Primary flow	mm	F	647	F	647	F	647	F	647
Secondary return port	mm	G	1551	G	1141	G	1353	G	1562
Thermistor pocket	mm	H	816	H	687	H	769	H	823
Primary return	mm	J	61	J	61	J	61	J	61
Immersion heater pocket	mm	K	230	K	230	K	230	K	230
Cold water inlet	mm	L	1961	L	1475	L	1726	L	1971
Cylinder Drain	mm	M	220	M	220	M	220	M	220
CH1 Flow	mm	N	266	N	266	N	266	N	266
CH2 Flow (n/a to SZ version)	mm	P	156	P	156	P	156	P	156
CH Return	mm	Q	132	Q	132	Q	132	Q	132
Buffer Connections	mm	R	-	R	-	R	-	R	-
Buffer Inspection	mm	S	-	S	-	S	-	S	-
Buffer Drain	mm	T	-	T	-	T	-	T	-
Primary heat exchanger surface area	m2		2.5		2.5		3.0		3.0
Primary heat exchanger capacity	Litres		10.6		10.6		10.6		10.6
Low Loss Header Capacity	Litres		1.95		1.95		1.95		1.95
HWA Heat pump Test	-		-		-		-		-
Primary heat exchanger thermal rating	kW		19.9		16.1		18		19
Heat up time from 10°C to 50°C	min		23.7		30.6		27.3		35.1
V40	Litres		222		227		276		317
BS EN 12897 Test	-		-		-		-		-
Primary heat exchanger thermal rating	kW		35.2		34.5		36		37.4
Primary heat exchanger pressure loss	bar		0.047		0.047		0.042		0.050
Heat up time from 10°C to 60°C	min		18.8		18.7		22.0		23.0
V40	Litres		306		303		373		406
Revision Level			D8.2		D8.2		D8.2		D8.2

Heat Up Time, HWA Heat Pump Test 002:2020 (flow rate 0.42l/s and flow temperature of 55°C)
Heat Up Time, BS EN 12897, G3 Performance Test (flow rate of 0.25l/s / 80°C).
The relative heat up times stated are based on the tests referenced above and carried out on all cylinders within the range. The stated test value may not reflect real life performance within a residential environment.

2.3.2 Two Zone Pre-Plumbed Cylinders with Integrated Low Loss Header Dimensions

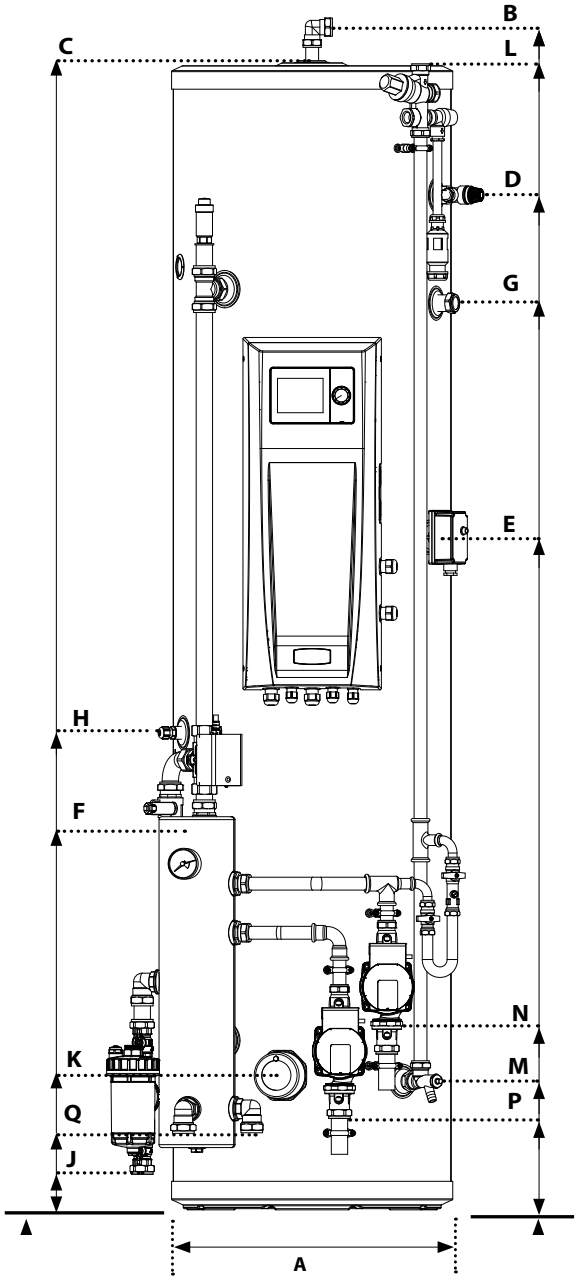

Figure 6. Logic Air DHW pre-plumbed slimline cylinder 210L, control box & low loss header 2-zone

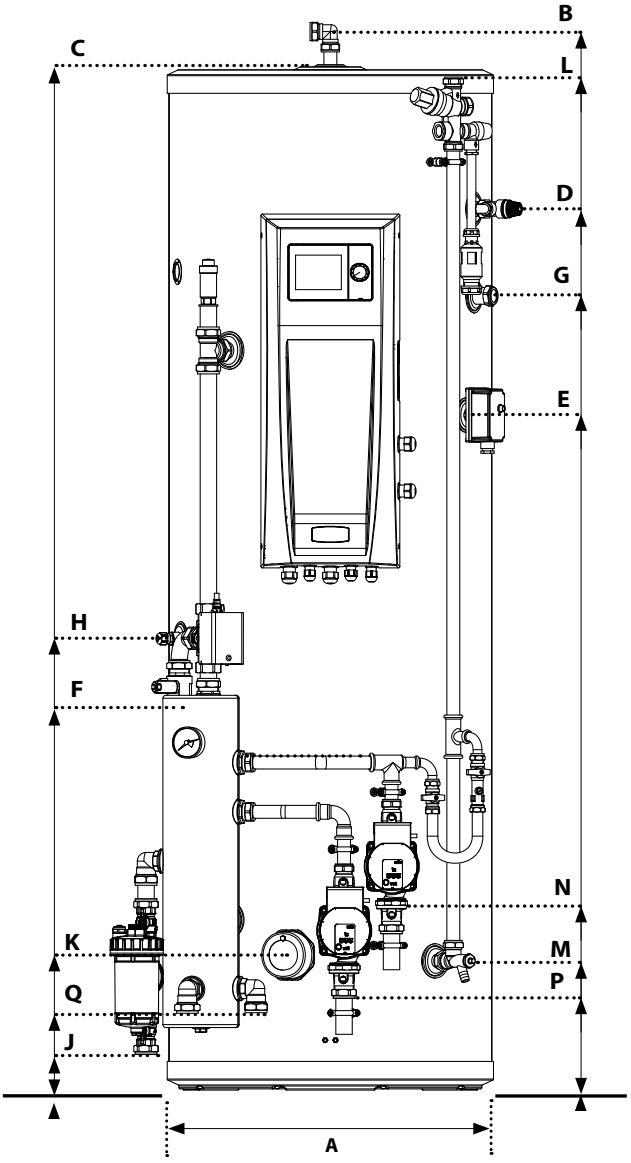

Figure 7. Logic Air DHW pre-plumbed cylinder 250L, control box & low loss header 2-zone

Table 4 Data - Single Zone Pre-plumbed Cylinder with Integrated Buffer

		Single Zone Pre-plumbed Cylinder with Integrated Buffer							
General Description		180, 210, 250 & 300 litre; 550mm & 630mm diameter; single coil cylinders intended for coupling with a range of heat pumps 5kW to 14kW; Pre-plumbed and pre-wired including control box. Intended for a single zone heating system installation. These products incorporate a buffer which increases system volume and decouples the heat pump from the central heating zone. It is possible to upgrade this product to a dual zone at a later date.							
Assembly Model code/number			**Logic Air DHW pre-plumbed cylinder 180L, control box & buffer 1-zone**		**Logic Air DHW pre-plumbed cylinder 210L, control box & buffer 1-zone**		**Logic Air DHW pre-plumbed cylinder 250L, control box & buffer 1-zone**		**Logic Air DHW pre-plumbed cylinder 300L, control box & buffer 1-zone**
Assembly UIN			**236206**		**236208**		**236210**		**236212**
Cylinder model code/number			**IDEPLUHP180DUOPPSZ**		**IDEPLUHP210DUOPPSZ**		**IDEPLUHP250DUOPPSZ**		**IDEPLUHP300DUOPPSZ**
Energy Efficiency Class			B		B		B		B
Heat Loss	Watts		49		55		62		68
	kWh/24h		1.18		1.33		1.49		1.63
Capacity (DHW content)	Litres		171		199		239		287
Volume heated by immersion heater	Litres		158		189		218		267
Weight Empty	kg		64.6		68.6		77		87
Weight Full	kg		305.6		337.4		379		437.5
Pressure Reducing valve setting	bar		3		3		3		3
Expansion relief valve setting	bar		4.5		4.5		4.5		4.5
Temperature setting of TPRV	°C		95		95		95		95
Pressure setting of TPRV	bar		6		6		6		6
Potable Expansion Vessel size.	Litres		18		24		24		35
Expansion Vessel charge	bar		3		3		3		3
Overall Width	mm		644		644		705		705
Overall Height	mm		1907		2095		1908		2128
Overall Depth	mm		702		702		780		780
Cylinder Diameter	mm	A	550	A	550	A	630	A	630
DHW outlet	mm	B	1888	B	2076	B	1889	B	2109
Cylinder Height	mm	C	1829	C	2017	C	1829	C	2049
TPRV port	mm	D	1586	D	1774	D	1572	D	1792
Manual reset overheat thermostat pocket	mm	E	1151	E	1151	E	1151	E	1151
Primary flow	mm	F	742	F	742	F	742	F	742
Secondary return port	mm	G	-	G	1664	G	1491	G	1678
Thermistor pocket	mm	H	1109	H	1172	H	1101	H	1174
Primary return	mm	J	117	J	117	J	82	J	82
Immersion heater pocket	mm	K	744	K	744	K	736	K	736
Cold Water Inlet	mm	L	1810	L	2000	L	1796	L	2016
Cylinder Drain	mm	M	744	M	744	M	736	M	736
CH1 Flow	mm	N	118	N	118	N	83	N	83
CH2 Flow (n/a to SZ version)	mm	P	118	P	118	P	83	P	83
CH Return	mm	Q	118	Q	118	Q	83	Q	83
Buffer Connections	mm	R	375	R	375	R	340	R	340
Buffer Inspection	mm	S	360	S	360	S	325	S	325
Buffer Drain	mm	T	221	T	221	T	219	T	219
Bleed Valve	mm	U	375	U	375	U	340	U	340
Primary heat exchanger surface area	m^2		2.5		2.5		2.5		3.0
Primary heat exchanger capacity	Litres		8.5		10.6		8.5		10.6
Buffer Capacity	Litres		70		70		63.5		63.5
HWA Heat pump Test	-		-		-		-		-
Primary heat exchanger thermal rating	kW		17.8		14.5		23.6		14.3
Heat up time from 10°C to 50°C	min		22.2		32.7		26.6		44.1
V40	Litres		185.5		224.3		260.2		295.8
BS EN 12897 Test	-		-		-		-		-
Primary heat exchanger thermal rating	kW		35.1		37.2		37		39.2
Primary heat exchanger pressure loss	bar		0.08		0.05		0.05		0.04
Heat up time from 10°C to 60°C	min		14.5		16.4		20.3		21.8
V40	Litres		241.5		288.4		354.5		402.2
Revision Level			D8.2		D8.2		D8.2		D8.2

Heat Up Time, HWA Heat Pump Test 002:2020 (flow rate 0.42l/s and flow temperature of 55°C)
Heat Up Time, BS EN 12897, G3 Performance Test (flow rate of 0.25l/s / 80°C).
The relative heat up times stated are based on the tests referenced above and carried out on all cylinders within the range. The stated test value may not reflect real life performance within a residential environment

2.3.3 Single Zone Pre-Plumbed Cylinder with Integrated Buffer Dimensions

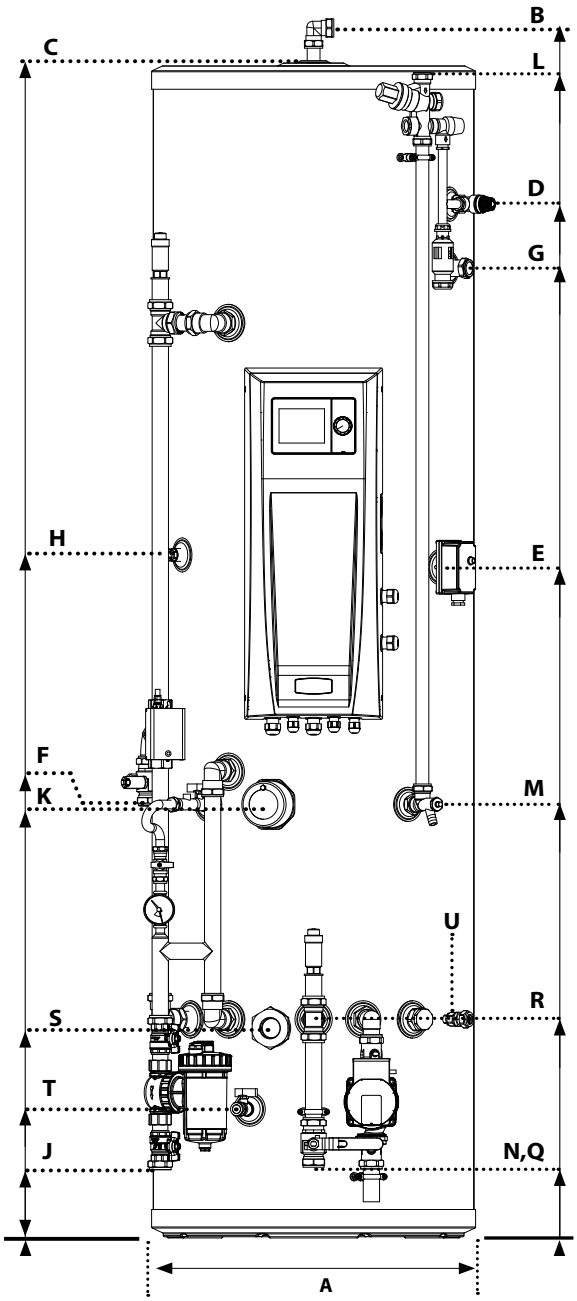

Figure 8. Logic Air DHW pre-plumbed cylinder 210L, control box & buffer 1-zone

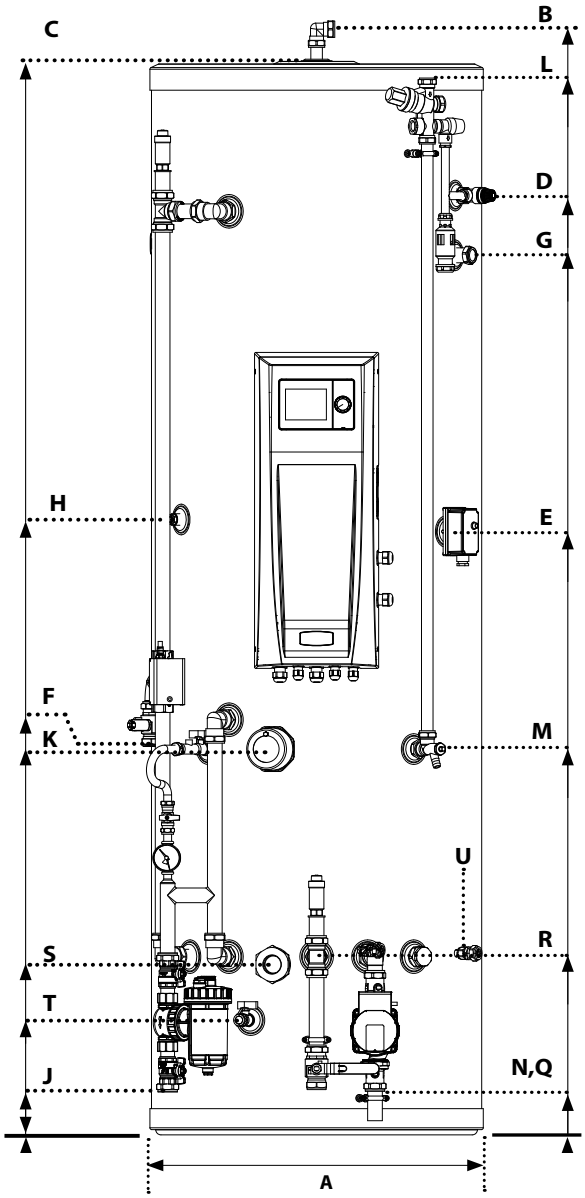

Figure 9. Logic Air DHW pre-plumbed cylinder 300L, control box & buffer 1-zone

Table 5 Data - Two Zone Pre-plumbed Cylinder with Integrated Buffer

		Two Zone Pre-plumbed Cylinder with Integrated Buffer							
General Description		180, 210, 250 & 300 litre; 550mm & 630mm diameter; single coil cylinders intended for coupling with a range of heat pumps 5kW to 14kW; Pre-plumbed and pre-wired including control box. Intended for a dual zone heating system installation. These products incorporate a buffer which increases system volume and decouples the heat pump from the central heating zones.							
Assembly Model code/number			**Logic Air DHW pre-plumbed cylinder 180L, control box & buffer 2-zone**		**Logic Air DHW pre-plumbed cylinder 210L, control box & buffer 2-zone**		**Logic Air DHW pre-plumbed cylinder 250L, control box & buffer 2-zone**		**Logic Air DHW pre-plumbed cylinder 300L, control box & buffer 2-zone**
Assembly UIN			**236207**		**236209**		**236211**		**236213**
Cylinder model code/number			**IDEPLUHP180DUOPPDZ**		**IDEPLUHP210DUOPPDZ**		**IDEPLUHP250DUOPPDZ**		**IDEPLUHP300DUOPPDZ**
Energy Efficiency Class			B		B		B		B
Heat Loss	Watts		49		55		62		68
	kWh/24h		1.18		1.33		1.49		1.63
Capacity (DHW content)	Litres		171		199		239		286
Volume heated by immersion heater	Litres		158		189		218		267
Weight Empty	kg		68		71.8		80		90.2
Weight Full	kg		309		340.6		382		439.7
Pressure Reducing valve setting	bar		3		3		3		3
Expansion relief valve setting	bar		4.5		4.5		4.5		4.5
Temperature setting of TPRV	°C		95		95		95		95
Pressure setting of TPRV	bar		6		6		6		6
Potable Expansion Vessel size.	Litres		18		24		24		35
Expansion Vessel charge	bar		3		3		3		3
Overall Width	mm		644		644		705		705
Overall Height	mm		1907		2095		1908		2128
Overall Depth			702		702		780		780
Cylinder Diameter	mm	A	550	A	550	A	630	A	630
DHW outlet	mm	B	1888	B	2076	B	1889	B	2109
Cylinder Height	mm	C	1829	C	2017	C	1829	C	2049
TPRV port	mm	D	1586	D	1774	D	1572	D	1792
Manual reset overheat thermostat pocket	mm	E	1151	E	1151	E	1151	E	1151
Primary flow	mm	F	742	F	742	F	742	F	742
Secondary return port	mm	G	-	G	1664	G	1491	G	1678
Thermistor pocket	mm	H	1109	H	1172	H	1101	H	1174
Primary return	mm	J	117	J	117	J	82	J	82
Immersion heater pocket	mm	K	744	K	744	K	736	K	736
Cold Water Inlet	mm	L	1810	L	2000	L	1796	L	2016
Cylinder Drain	mm	M	744	M	744	M	736	M	736
CH1 Flow	mm	N	118	N	118	N	83	N	83
CH2 Flow (n/a to SZ version)	mm	P	118	P	118	P	83	P	83
CH Return	mm	Q	118	Q	118	Q	83	Q	83
Buffer Connections	mm	R	375	R	375	R	340	R	340
Buffer Inspection	mm	S	360	S	360	S	325	S	325
Buffer Drain	mm	T	221	T	221	T	219	T	219
Bleed Valve	mm	U	375	U	375	U	340	U	340
Primary heat exchanger surface area	m^2		2.5		2.5		2.5		3.0
Primary heat exchanger capacity	Litres		8.5		10.6		8.5		10.6
Buffer Capacity	Litres		70		70		63.5		63.5
HWA Heat pump Test	-		-		-		-		-
Primary heat exchanger thermal rating	kW		17.8		14.5		23.6		14.3
Heat up time from 10°C to 50°C	min		22.2		32.7		26.6		44.1
V40	Litres		185.5		224.3		260.2		295.8
BS EN 12897 Test	-		-		-		-		-
Primary heat exchanger thermal rating	kW		35.1		37.2		37		39.2
Primary heat exchanger pressure loss	bar		0.08		0.05		0.05		0.04
Heat up time from 10°C to 60°C	min		14.5		16.4		20.3		21.8
V40	Litres		241.5		288.4		354.5		402.2
Revision Level			D8.2		D8.2		D8.2		D8.2

Heat Up Time, HWA Heat Pump Test 002:2020 (flow rate 0.42l/s and flow temperature of 55°C)
Heat Up Time, BS EN 12897, G3 Performance Test (flow rate of 0.25l/s / 80°C).
The relative heat up times stated are based on the tests referenced above and carried out on all cylinders within the range. The stated test value may not reflect real life performance within a residential environment.

2.3.4 Two Zone Pre-Plumbed Cylinder with Integrated Buffer Dimensions

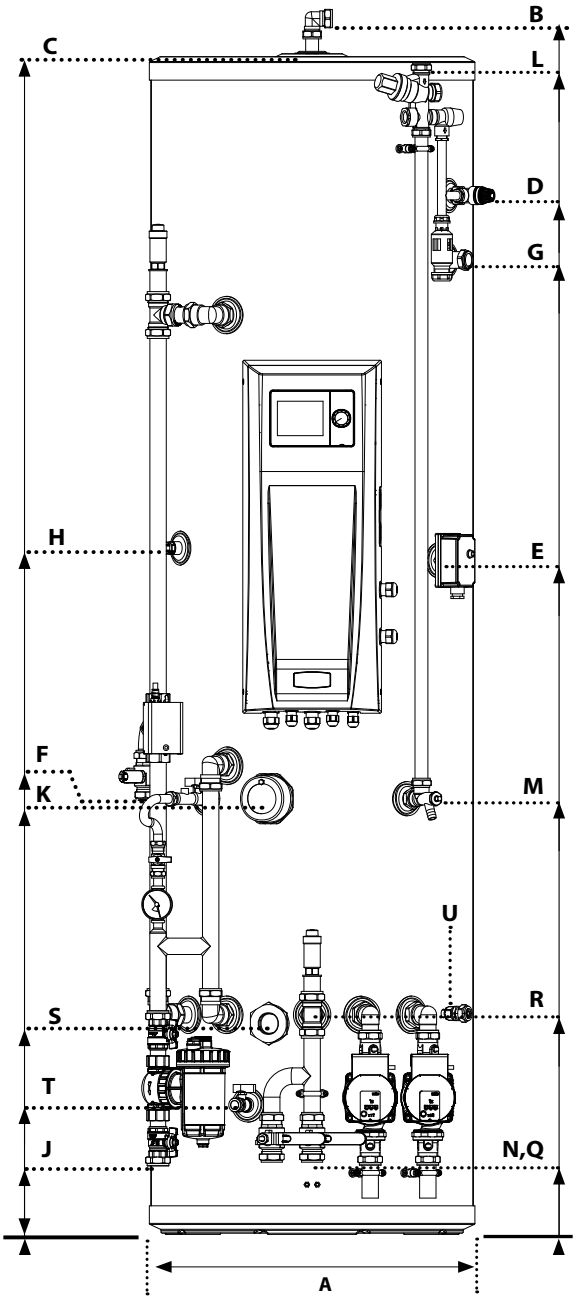

Figure 10. Logic Air DHW pre-plumbed cylinder 210L, control box & buffer 2-zone

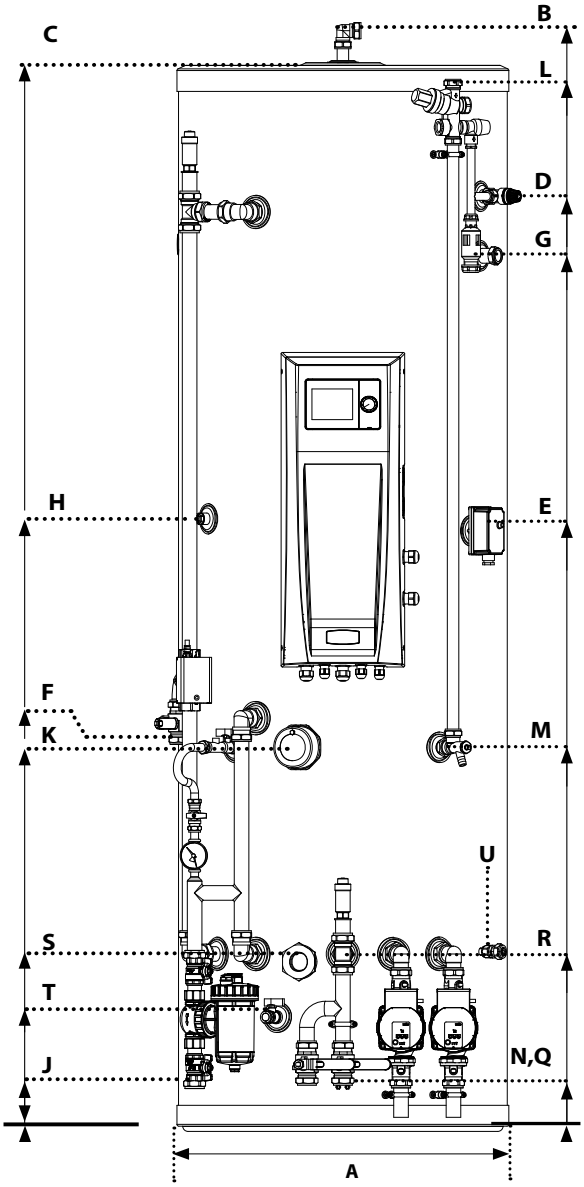

Figure 11. Logic Air DHW pre-plumbed cylinder 300L, control box & buffer 2-zone

Table 6 Data - Single Zone Slim Line Pre-Plumbed Cylinder with Integrated Buffer Dimensions

			Slimline Duo		
General Description			150, 180; litre; 475mm diameter; single coil cylinders intended for coupling with a range of heat pumps 5kW to 14kW; Pre-plumbed and pre-wired including control box.Intended for a single zone heating system installation. These products incorporate a buffer which increases system volume and decouples the heat pump from the central heating zone. It is possible to upgrade this product to a dual zone at a later date.		
Assembly Model code/number			**Logic Air DHW pre-plumbed slimline cylinder 150L, control box & buffer 1-zone**		**Logic Air DHW pre-plumbed slimline cylinder 180L, control box & buffer 1-zone**
Assembly UIN			**241505**		**241509**
Cylinder model code/number			**IDEPLUHP150DUOPPSZSL**		**IDEPLUHP180DUOPPSZSL**
Energy Efficiency Class			B		C
Heat Loss	Watts		51		64
	kWh/24h		1.22		1.55
Capacity (DHW content)	Litres		143		163
Volume heated by immersion heater	Litres		136		156
Weight Empty	kg		57		61
Weight Full	kg		200		224
Pressure Reducing valve setting	bar		3		3
Expansion relief valve setting	bar		4.5		4.5
Temperature setting of TPRV	°C		90		90
Pressure setting of TPRV	bar		6		6
Potable Expansion Vessel size.	Litres		19		19
Expansion Vessel charge	bar		3		3
Overall Width	mm		569		569
Overall Height	mm		1890		2084
Overall Depth	mm		590		590
Cylinder Diameter	mm	A	475	A	475
DHW outlet	mm	B	1664	B	1840
Cylinder Height	mm	C	1890	C	2066
TPRV port	mm	D	1664	D	1840
Manual reset overheat thermostat pocket	mm	E	1664	E	1840
Primary flow	mm	F	346	F	346
Secondary return port	mm	G	n/a	G	n/a
Thermistor pocket	mm	H	1053	H	1053
Primary return	mm	J	110	J	110
Immersion heater pocket	mm	K	582	K	582
Cold water inlet	mm	L	1856	L	2033
Cylinder Drain	mm	M	582	M	582
CH1 Flow	mm	N	271	N	271
CH2 Flow (n/a to SZ version)	mm	P	n/a	P	n/a
CH Return	mm	Q	115	Q	115
Buffer Connections	mm	R	223	R	223
Buffer Inspection	mm	S	215	S	215
Buffer Drain	mm	T	215	T	215
Primary heat exchanger surface area	m2		1.8		1.8
Primary heat exchanger capacity	Litres		6.4		6.4
Buffer Capacity	Litres		32.5		32.5
HWA Heat pump Test	-		-		-
Primary heat exchanger thermal rating	kW		14.2		15.5
Heat up time from 10°C to 50°C	min		24.0		26.1
V40	Litres		162.0		192.3
BS EN 12897 Test	-		-		-
Primary heat exchanger thermal rating	kW		29.5		33.0
Primary heat exchanger pressure loss	bar		0.028		0.028
Heat up time from 10°C to 60°C	min		14.8		15.6
V40	Litres		208.7		244.8
Revision Level			D10		D8

Heat Up Time, HWA Heat Pump Test 002:2020 (flow rate 0.42l/s and flow temperature of 55°C)
Heat Up Time, BS EN 12897, G3 Performance Test (flow rate of 0.25l/s / 80°C).
The relative heat up times stated are based on the tests referenced above and carried out on all cylinders within the range. The stated test value may not reflect real life performance within a residential environment.

2.3.5 Installation in Enclosed Areas

When installing in a cupboard or similarly enclosed area it must be made sure that there are sufficient clearances for future access and maintenance activities.

Either a balanced cold feed must be utilised, or full house protection must be provided via a variable pressure reducing valve set to 3 bar.

- If the balanced cold feed is utilised; The DHW cylinder must be installed in an area that is at least 730mm wide and 600mm deep.
- If full house protection is provided by a variable pressure reducing valve; The DHW cylinder may be installed in an area that is at least 600mm wide and 600mm deep. It must be made sure that Expansion vessels are installed in an area that allows for access to the charging valve and also be fully removable and replaceable. It must also be made sure that there is a minimum clearance of 25mm around the 3-way valve for maintenance access.

2.3.6 Single Zone Pre-Plumbed Slimline Duo Cylinder

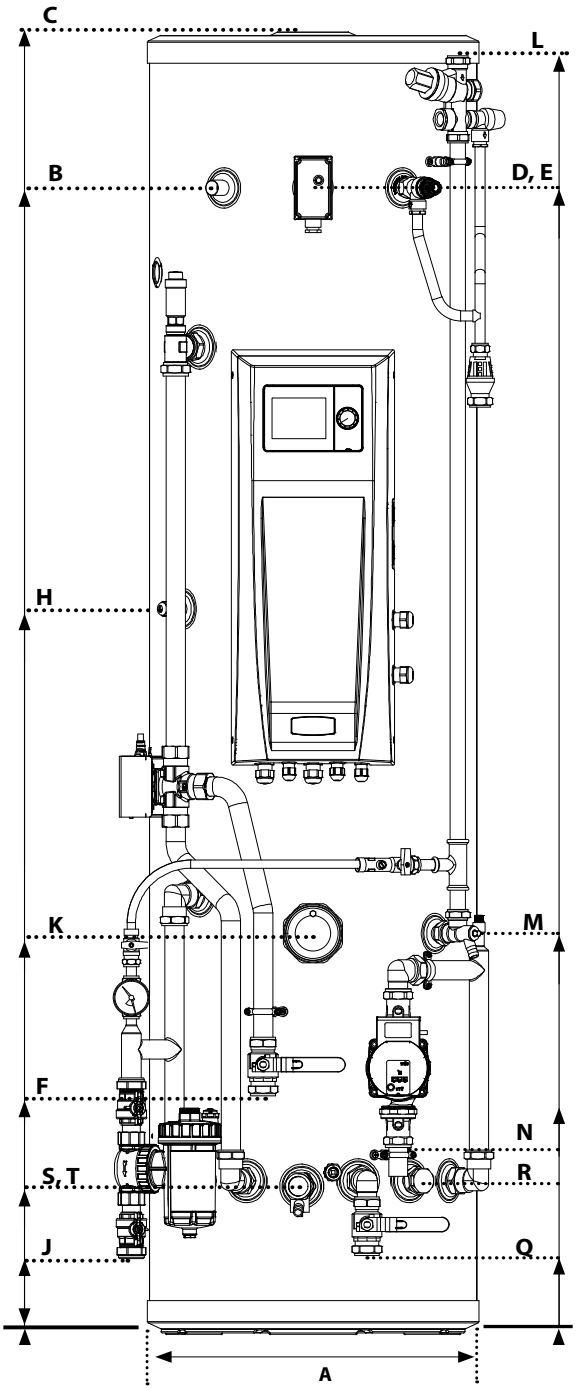

Figure 12. Logic Air DHW pre-plumbed slimline cylinder 150L, control box & buffer 1-zone

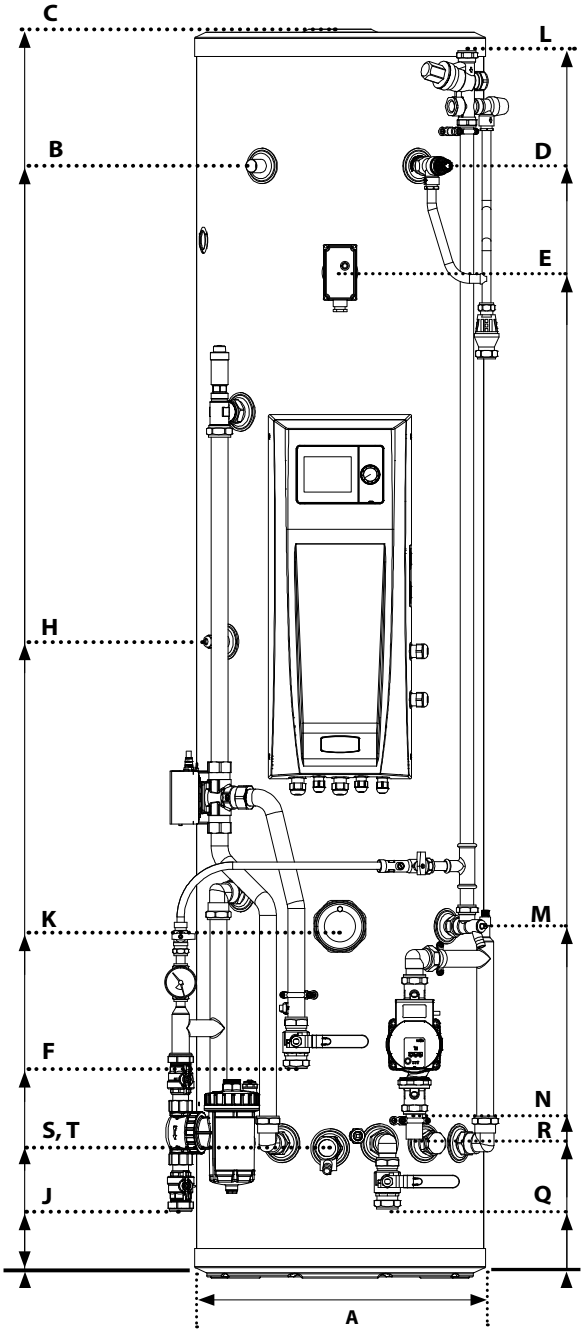

Figure 13. Logic Air DHW pre-plumbed slimline cylinder 180L, control box & buffer 1-zone

2.4 CONTROL BOX

Table 7 Data - Control Box

Physical Properties		
Packaged Weight - Gross (unpackaged Weight)	kg	8.5 (5)
Height (unpackaged)	mm	796 (627)
Width (unpackaged)	mm	320 (254)
Depth (unpackaged)	mm	176 (147)
Maximum Ambient Temp	° C	60
Electrical Properties		
IP Rating.	IP	20
Rated Voltage.	VAC	220-240
Maximum Rated Current (Control Box)	A	1
Maximum Rated Current (Contactor)	A	16
Rated Power Input (Control Box)	W	100
Rated Power Input (Contactor)	W	3000
Frequency	Hz	50

2.4.1 Control Box Dimensions and Clearances

⚠ CAUTION: Do not obstruct the product by any surrounding objects or surfaces as this can limit access and adversely affect performance. The minimum clearances that are shown in *Figure 15* should be always maintained.

ⓘ IMPORTANT: Front clearance can be reduced to 5mm (e.g. cupboard installation) but must maintain 900 mm serviceable access.

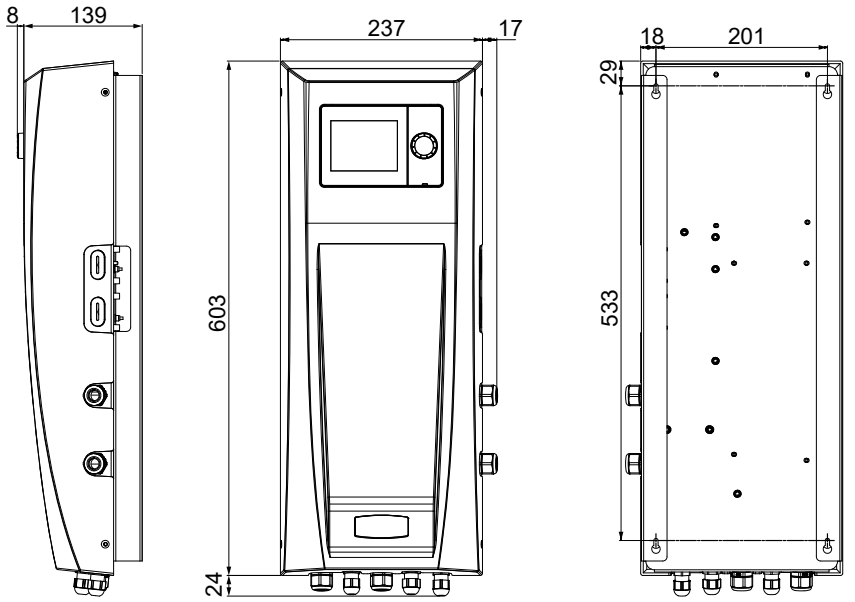

Figure 14. Control Box - Dimensions

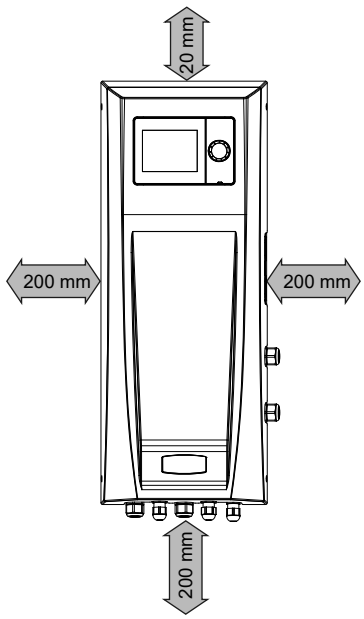

Figure 15. Control Box - Clearances

2.5 CONTENTS PROVIDED WITH APPLIANCE

2.5.1 Monobloc Heat Pump

Refer to Section *4.1.3 on page 31*.

2.5.2 DHW Cylinders

Refer to *Table 8 for* components supplied with the DHW Cylinders and Section *4.2.1 on page 36.*

2.5.3 Control Box

Refer to Section *4.3.1 on page 40.*

Table 8 Content provided with DHW Cylinders

Brand reference code	IDEPLUHP																	
Nominal Volume	150	180	150	180	210	210	250	300	150	180	180	180	210	210	250	250	300	300
Pre-plumbed (PP)	PP																	
Single zone, Two Zone (SZ,DZ)	SZ				DZ				SZ		SZ	DZ	SZ	DZ	SZ	DZ	SZ	DZ
Slimline-475 mm/ Standard-550 mm / Wide-630 mm (SL/S/W)	SL		S		SL	S			SL		S				W			
No circulation pump, Low Loss Header / Buffer (NP/LLH/BUFFER/)	NP	NP	NP	NP	LLH	LLH	LLH	LLH	BUFFER									
Pre-Plumbed unvented cylinder components																		
Inlet control group, inc. PRV, BCF, CV, ERV	Y	Y	Y	Y	Y	Y	Y	Y	Y	Y	Y	Y	Y	Y	Y	Y	Y	Y
Temperature and pressure relief valve	Y	Y	Y	Y	Y	Y	Y	Y	Y	Y	Y	Y	Y	Y	Y	Y	Y	Y
Tundish	Y	Y	Y	Y	Y	Y	Y	Y	Y	Y	Y	Y	Y	Y	Y	Y	Y	Y
Cylinder drain valve, on cold inlet elbow, (22mm elbow with MT cock)	Y	Y	Y	Y	Y	Y	Y	Y	Y	Y	Y	Y	Y	Y	Y	Y	Y	Y
Correctly sized expansion vessel (supplied not fitted)	Y	Y	Y	Y	Y	Y	Y	Y	Y	Y	Y	Y	Y	Y	Y	Y	Y	Y
Pre-wired controls																		
DHW thermistor	Y	Y	Y	Y	Y	Y	Y	Y	Y	Y	Y	Y	Y	Y	Y	Y	Y	Y
DHW cylinder overheat thermostat	Y	Y	Y	Y	Y	Y	Y	Y	Y	Y	Y	Y	Y	Y	Y	Y	Y	Y
Pre-Plumbed Primary system components																		
Full divert, spring close, 3-port valve, motor open for DHW heating	Y	Y	Y	Y	Y	Y	Y	Y	Y	Y	Y	Y	Y	Y	Y	Y	Y	Y
Low loss header with drain point	N	N	N	N	Y	Y	Y	Y	N	N	N	N	N	N	N	N	N	N
System filter fitted to the HP return, Inc. isolation valves	Y	Y	Y	Y	Y	Y	Y	Y	Y	Y	Y	Y	Y	Y	Y	Y	Y	Y
Auto air valve on central heating returns	N	N	N	N	N	N	N	N	N	N	Y	Y	Y	Y	Y	Y	Y	Y
Central heating zone pump with isolation valves	N	N	N	N	Y	Y	Y	Y	Y	Y	Y	Y	Y	Y	Y	Y	Y	Y
System filling loop	Y	Y	Y	Y	Y	Y	Y	Y	Y	Y	Y	Y	Y	Y	Y	Y	Y	Y
Isolation valves on HP flow	Y	Y	Y	Y	Y	Y	Y	Y	Y	Y	Y	Y	Y	Y	Y	Y	Y	Y
Isolation valves on CH returns	N	N	N	N	N	N	N	N	Y	Y	Y	Y	Y	Y	Y	Y	Y	Y
DHW Back up heat source																		
Immersion heater	Y	Y	Y	Y	Y	Y	Y	Y	Y	Y	Y	Y	Y	Y	Y	Y	Y	Y
Expansion vessel (supplied in a separate box)																		
Expansion vessel size	18	18	18	18	24	24	24	35	18	18	18	18	24	24	24	24	35	35

2.6 LOCATION OF DATA PLATES

2.6.1 Heat Pump

The data plate can be found on the side of the Heat Pump as shown in *Figure 16*.

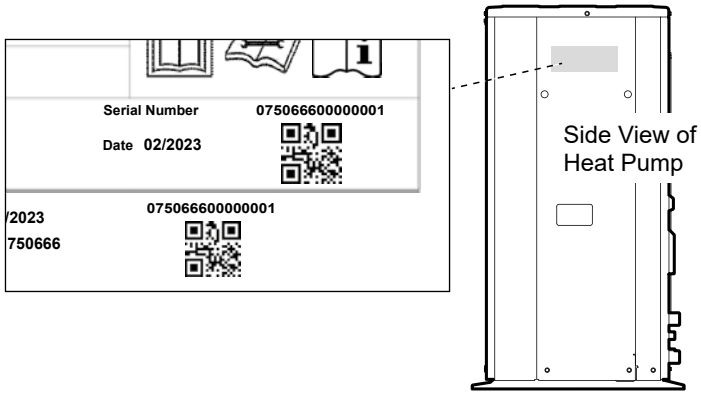

Figure 16. Heat Pump - Location of Data Plates

2.6.2 DHW Cylinder

The location of the main data plate and warning label, shown in *Figure 17,* can be different depending upon the model of the DHW Cylinder.

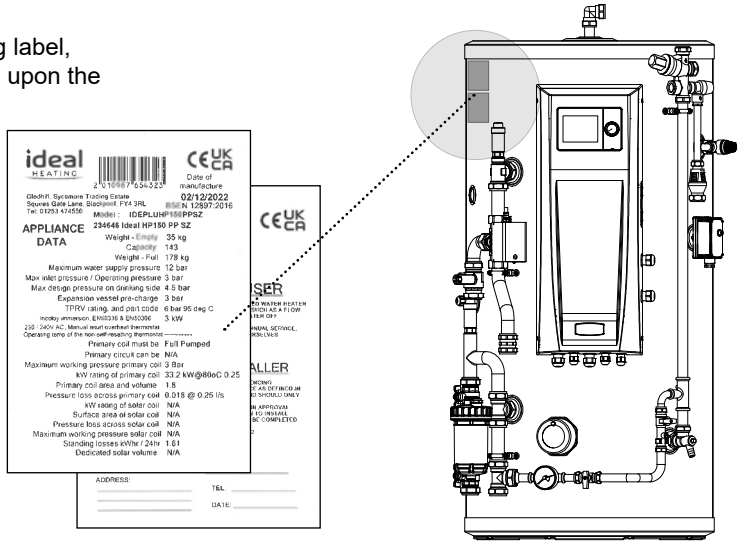

Figure 17. DHW Cylinder - Location of Data Plates

2.6.3 Control Box

The main data plate can be found on the inside of the control box door as shown in *Figure 18*.

The tear off strips of the data plate can be found on the side of the control box, *Figure 18* and on the front of the literature pack envelope.

①

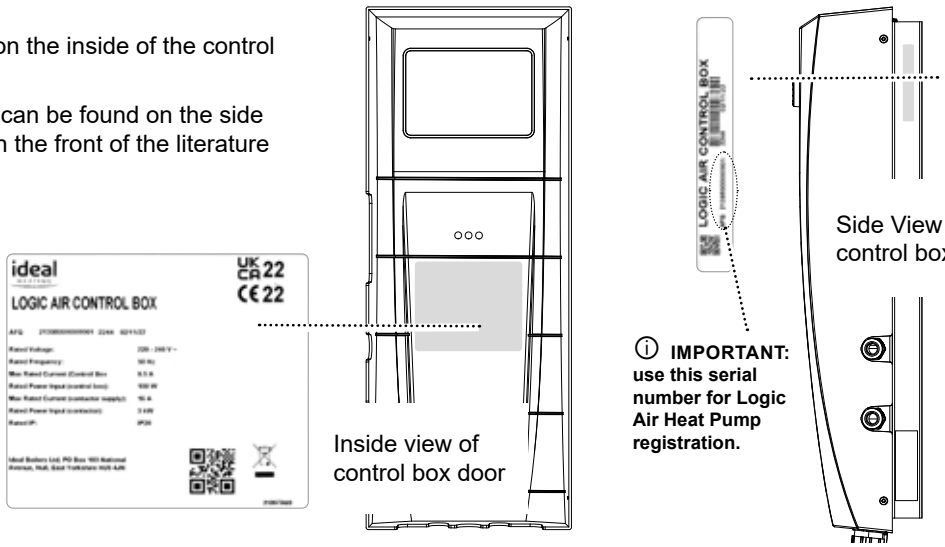

Figure 18. Control Box - Location of Data Plates

2.7 HEAT PUMP OPERATING PRINCIPLES

2.7.1 Operating Principle

The Heat Pump contains a closed refrigerant circuit. When operating, refrigerant is circulated around the circuit absorbing heat energy from the ambient air, increasing its temperature and transferring it to the heating and hot water systems through a heat exchanger.

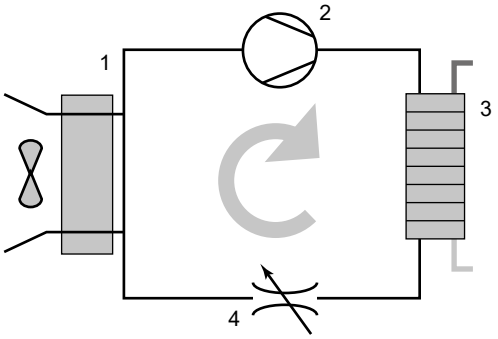

Figure 19. Closed Refrigerant Circuit

The circuit consists of four main components/functions.

1. Refrigerant absorbs heat energy during vaporisation whilst flowing through the evaporator (heat exchanger).
2. The compressor increases the pressure and temperature of the vapour refrigerant.
3. As refrigerant changes state to liquid in the condenser (heat exchanger) it transfers heat energy into the primary system water.
4. The expansion valve reduces the pressure and temperature of the liquid refrigerant to begin the vaporisation process and repeat the cycle.

For an in-depth refrigerant circuit schematic see *Appendix 1.1.6*.

2.7.2 Defrost Method

During operation, the Heat Pump will periodically be required to go through an automatic defrosting process dependant on the outdoor conditions. Over time the evaporator will begin to collect frost from the water vapour in the air.

The defrost process causes the refrigerant to be directed to the evaporator and uses the hot vapour to thaw the frost into liquid water. This liquid water then collects in the base panel and flows through into the drain openings in the centre of the base panel.

2.7.3 Domestic Hot Water

If there is a domestic hot water (DHW) cylinder installed and the temperature of the DHW cylinder is less than the Hot Water Set point minus the hysteresis then the heat pump circuit is activated and directed (via the divertor valve) to heat the DHW cylinder. The Heat Pump and primary circuit circulation pump will be active until the DHW Cylinder has reached its setpoint.

This function will always take priority over the heating of the space heating system within the programmed time period. The two functions cannot operate simultaneously.

2.7.4 Space Heating

If there is a heating demand and the temperature of any thermostat is less than its setpoint, the primary circuit is activated and directed (via the divertor valve) to heat the space heating circuits. The Heat Pump and primary heating circuit circulator will modulate and be active until the space heating has reached its setpoint.

2.7.5 Anti-Legionella Function

If there is a DHW cylinder installed, Anti-Legionella measures should be utilised in accordance with HSE guidance HSG274 Part 2 or appropriate regulatory body. The control system is provided with an Anti-Legionella function for the DHW cylinder, the default parameter, which is adjustable according to installation / user requirements, initiates this function once per week and heats the DHW cylinder to 60°C for a period of 1 hour using a DHW backup immersion or boiler.

2.7.6 Cold Start Function

With the Heat Pump in Standby Mode, if at any time a heating demand is initiated and the primary heating circuit water temperature is below 17°C, then the Heat Pump will not commence operation. As at these water temperatures, damage of the appliance may be caused upon start-up.

The Cold Start Function automatically enables alternative energy sources to heat the primary heating circuit allowing the heat pump to resume operation. Dependent upon the system configuration the following solutions may provide this function.

System with DHW Cylinder:

If there is a DHW cylinder installed, during this event, the Heat Pump circulator pump and DHW cylinder back up heater will operate only to increase the primary circuit water temperature. Once 22 °C is achieved the DHW back up heater will be terminated, and normal Heat Pump operation may then resume.

No DHW cylinder:

If no DHW cylinder is installed, a supplementary back up heater installed within the primary heating circuit must be fitted to provide this function. In this event the supplementary back up heater will operate in the same way detailed above and heat the primary heating circuit water to 22 °C, at which point the supplementary back up heater will be terminated, and normal Heat Pump operation may then resume.

Combi - Boiler Back Up:

When using a combustion Combi-Boiler configuration with no DHW cylinder, the boiler will operate to provide this functionality. In this event the boiler will operate in the same way detailed above and heat the primary heating circuit water to 22 °C, at which point the boiler operation will be terminated and normal Heat Pump operation may then resume.

Heat Only Combustion Boiler Back Up:

When using a combustion Heat Only Boiler configuration with a DHW cylinder, no DHW back up heater is required as the boiler will operate to provide this functionality. In this event the boiler will operate in the same way detailed above and heat the primary heating circuit water to 22 °C, at which point the boiler operation will be terminated and normal Heat Pump operation may then resume.

2.7.7 Frost Protection

Appliance

If the ambient air temperature is ≤ 1°C, Plant Frost Protection will be initiated. During this event, the Heat Pump circulator pump and central heating zone pumps (if applicable) will operate intermittently to prevent the primary heating water from freezing.

Condenser

If the primary circuit water temperature is ≤ 4 °C and the Heat Pump has power but is in Standby Mode i.e., no DHW, CH or Anti-Legionella demand, Condenser Frost Protection will be initiated. Firstly, the Heat Pump circulator pump will initiate, if after a defined time period, the primary circuit water temperature is still ≤ 4 °C the backup heater will initiate to raise the temperature to 22 °C. Once this temperature is achieved the backup heater will be terminated and normal Heat Pump operation may then resume.

Note: The backup heater utilised in this mode will depend upon the system configuration (refer to *2.7.6 Cold Start Function* for available solutions).

Frost Protection (Dwelling)

If the temperature of the dwelling is ≤ 8 °C, the room frost protection mode will be initiated to prevent damage to the central heating system. During this event, the central heating zone pumps will operate intermittently and the heat pump will activate to increase the temperature of the dwelling circuit.

ⓘ **IMPORTANT: Make sure prior to the installation that permissions have been granted for the installation.**

3.1 SYSTEM COMBINATIONS

⚠ WARNING: Failure to comply with this documentation will lead to increased risk of injury or death to persons, or damage to the product or property.

ⓘ **IMPORTANT: Any combinations of the products that are not listed below are outside of the scope of this document and are not covered under warranty and are excluded from liability.**

The available product combinations are:

- Logic Air + Logic Air Control Box + Pre-Plumbed Standard Cylinder (Single Zone or Twin Zone with LL)
- Logic Air + Logic Air Control Box + Pre-Plumbed Slimline Cylinder (Single Zone or Twin Zone with LL)
- Logic Air + Logic Air Control Box + Pre-Plumbed DHW Cylinder with Integrated Buffer Tank.
- Logic Air + Logic Air Control Box Wall Mounted
- Logic Air + Logic Air Control Box + Heat Pump DHW Cylinder
- Logic Air + Logic Air Control Box + Buffer Tank

⚠ WARNING: Installations must conform to the schematics in Appendix 1.1. It is the responsibility of the installer to make sure that all appropriate measures are implemented including appropriate safety devices.

Refer to *Appendix 1.2* for System Schematic & arrangement details.

PRE-INSTALLATION

3.2 PRIMARY HEATING SYSTEM REQUIREMENTS

To safeguard correct function of the system it must be made sure that the system operates within the specification outlined in *Table 9*.

Table 9 System Specification

	4 kW	5 KW	8 kW	10 kW
Maximum System Operating Pressure (bar)	3.0			
Minimum System Pressure (bar)	0.5			
Expected System Pre-charge (bar)	1 to 1.5			
Design Flow Rate (l/min)	11.5	14.3	22.9	28.7
Minimum Flow Rate (l/min)	8.5		14.5	
Maximum Water Temperature (°C)	65			
Minimum Water Temperature (°C)	17			
Minimum Copper Pipe Size (ø) *	22 mm		28 mm	
Minimum System Filter Mesh Size (µ)	800			
Minimum Water Volume (L)	24		40	

****Consideration of the internal diameter of selected pipework must be taken into account when calculating the system resistance and water velocities at the specified design flow rates.***

⚠ WARNING: It is the responsibility of the installer to make sure that the correct safety and function devices are installed to the heating system.

⚠ CAUTION: The system pipework must be designed and installed to achieve the correct Design Flow Rate. Failure to achieve the correct design rate will lead to poor performance and efficiency.

⚠ CAUTION: The system flow rate must be guaranteed to be above the minimum flow rate requirement in all operating modes, taking care when the installation includes thermostatic / electronic control valves. When the appliance is operating in Frost Protection mode, the primary circulator pump will operate at a reduced speed and volume, therefore this must be taken into consideration. If the minimum flow rate of the system is not maintained at all times, the Heat Pump will not operate. The water velocity in the pipe should be kept within limits of material to avoid erosion, corrosion, and excessive noise generation.

ⓘ **IMPORTANT: Added resistance in the hydronic circuit will result in the reduction of the overall system efficiency. To reduce resistance, as few bends must be used as possible and swept bends are to be used where practical. The cross-sectional area of the pipework must be maintained and meet the minimum size.**

3.2.1 Minimum System Volume of the Primary Heating Circuit

⚠ CAUTION: A minimum free system volume of 40L for the 8/10 kW and 24L for the 4/5 kW must be available to the Heat Pump at all times. This ensures that the Heat Pump does not cycle excessively and is able to defrost completely. Failure to adhere to this requirement will result in inefficient operation of the Heat Pump and the potential for nuisance faults.

Free volume shall be considered as any part of the system with un-valved sections of pipework and radiators without Thermostatic Radiator valves (TRV).

If the minimum free volume cannot be met this will need to be increased. This can be achieved with the addition of a volumiser or buffer vessel.

3.2.2 System Expansion

⚠ WARNING: Failure to appropriately protect against system expansion may lead to catastrophic failure of the system circuit, major property damage and serious harm to dwelling inhabitants. It must be made sure that it is impossible to isolate the expansion vessel from the system.

Refer to BS EN 12828 - Heating systems in buildings - Design for water-based heating systems; when determining the accurate size of the Expansion Vessel . It must be made sure that the installed expansion vessel is large enough to accommodate the system volume.

If glycol is used a correction factor should be applied to account for higher coefficients of expansion.

3.2.3 Maximum Pipe Length

Primary pipework must be correctly designed and installed to enable the correct design flow rate to be achieved.

3.2.4 Water Quality Requirements

⚠ WARNING: Make sure that water intended for human consumption complies with EU Directive 98/83/EC.

⚠ CAUTION: Due to the lower operating temperatures, it is recommended that heat pump systems have additional protection against oxidation and aggressive chemicals.

⚠ CAUTION: Failure to adequately dose the heating systems corrosion inhibitor will lead to the gradual deterioration of the system performance over time and reduce both the lifespan and efficiency of the product.

System water is to be cleaned, treated, tested and mainted in accordance with BS 7593:2019 - Code of practice for the preparation, commissioning, and maintenance of domestic central heating and cooling water systems for guidance on water quality and treatment methods. Record water quality test results in the Benchmark Section at the rear of the book.

The Logic Air pre-plumbed cylinder range is fitted with a primary circuit system filter as standard. When a pre-plumbed cylinder with system filter is utilised, no additional strainers should be fitted to the primary pipework. If the installation does not include a Logic Air pre-plumbed cylinder an appropriately sized and positioned system filter and strainer with a minimum mesh size of 800 µ is required to be installed in the primary circuit to the Heat Pump to prolong the life expectancy of the system.

3.2.5 System Water Antifreeze Protection

⚠ WARNING: Do not use mono ethylene glycol. Use Propylene glycol only.

⚠ CAUTION: Where any circuit pipework is exposed to ambient temperatures of < 5 °C, antifreeze protection must be installed. Failure to install adequate antifreeze protection methods may lead to damage to the system. Damage to systems which do not have adequate antifreeze protection methods is not covered by warranty.

When the Heat Pump is exposed to freezing temperatures, the primary heating circuit must either be:

- Charged with a glycol water mixture, refer to Section *5.2.2.4.*
- Installed with antifreeze protection valves on both the inlet and outlet of the Heat Pump refer to Section *5.2.2.3.*
- Bivalent Combi Boiler and Bivalent System configurations must be charged with Glycol.

⚠ WARNING: Do not install antifreeze valves if the system has been charged with glycol or vice versa.

All exterior pipework must be insulated with UV resistance and water proof pipe lagging.

A fill and flush valve must be installed when the system is charged with Glycol.

3.3 HEAT PUMP - INSTALLATION AREA

⚠ CAUTION: The product is not to be obstructed by any surrounding objects or surfaces as this can limit access and adversely affect performance. The minimum clearances that are shown in *Figure 3* should be always maintained.

⚠ WARNING: The installation area should always be kept clear of ignition sources, including but not limited to; electrical switches, electrical plug sockets, and lamps.

⚠ WARNING: The 8 & 10 kW models weigh 110 kg and the 4 & 5 kW models weigh 86 kg excluding accessories. Mounting structures and fixtures must be capable of supporting this weight.

The proposed installation site should be explained, discussed, and agreed with the client prior to the start of installation, making them aware of blowing cold air, potential condensate build up, noise emissions, and vibration.

The Heat Pump must be installed outdoors, preferably in a sunny location. It is acceptable to install the product underneath a protective roof and/or surrounded by some walls and surfaces, providing that the installation requirements and clearances are maintained. The product must be accessible for maintenance activities.

National regulations regarding noise emissions should be obeyed. When selecting a site, reverberation of noise against surfaces should be considered, especially in areas where the Heat Pump is adjacent to multiple walls.

It should also be made sure that the cold air does not cause any disturbance of neighbours or negatively influence the installation site.

Routing of pipework, electrical cables and condensate disposal method should be considered and accounted for when selecting the installation site.

3.3.1 Installation Environment

⚠ WARNING: The air drawn into the air intake of the product must be free from methane gas, ammonia, and any other flammable/explosive substances. The Heat Pump must not be placed in locations likely to produce such vapours such as near stables or near large open fertilizer stores.

⚠ CAUTION: The Heat Pump installation environment must be free from corrodents, specifically: mineral oil, sulphur, arsenic acids, and environments of high salt content, such as coastal areas. These will cause corrosion of metal components.

Do not install the heat pump within 50 meters of the sea, if a heat pump is installed within 500 meters from the sea, the installation location cannot be in 'line of sight' of the sea. Any installation beyond 500 meters does not require any additional installation requirements, terms and conditions apply.

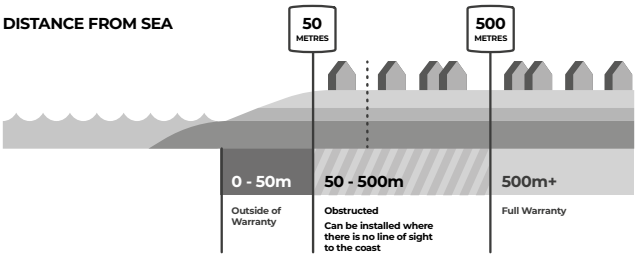

Figure 20. Installation Location

The Heat Pump must only be installed at an altitude less than 2,000 m from sea level.

The installation site of the Heat Pump should not be placed in areas that are subjected to significant dirt or water flow such as near defective guttering. The air intake should also not be placed in an area prone to build up of any medium that could cause significant blockage.

The installation site should not obstruct or restrict the airways or be subjected to strong winds.

The Heat Pump must be raised sufficiently above ground level to prevent blockage by settling snow.

Make sure that there is protection from falling snow or water, including build ups from roofs that may fall in large quantities.

3.3.2 Orientation

The Heat Pump requires unrestricted air flow in order to work at its most efficient. It is recommended to install in locations protected from direct or oncoming wind if possible. Strong winds may adversely affect evaporator fan operation and, when combined with precipitation, can cause ice to form. If the above is not possible wind baffles can be installed.

The evaporator air intake is fitted with an air temperature sensor as standard and is used by the Heat Pump for ambient air temperature measurement. This must not be located in full sun as this may affect the accuracy of the device.

3.3.3 Mounting

The Heat Pump should be installed on a level mounting foundation which must be structurally sound and designed to not structurally degrade over time. It should be mounted at least 5cm above ground level whilst not exceeding 100cm.

The Heat Pump must not be directly installed to fixtures without sufficient means of vibration absorption to prevent vibration from being conducted through the fixtures.

The area underneath the product mount must be capable of absorbing spilt condensate and be structurally unaffected by freezing condensate or long-term exposure to moisture. It is recommended that gravel is used underneath the mounting base.

Condensate Disposal

⚠ WARNING: The installation should not cause any risk or danger to the surrounding area. It should be made sure that there are no roads or pathways that are significantly influenced by the condensate disposal of the Heat Pump. Make sure that suitable condensate disposal methods are installed.

The Heat Pump discharges condensate during normal operation and the defrosting function. Condensate can be disposed of using the following methods and must be considered when determining the installation site, refer to Section *4.1.5.*:

- Ground disposal into a soak away or gravel bed.
- Piped into a rainwater drain/gully.

3.3.4 Pressure Relief Valve Discharge Outlet

⚠ WARNING: Make sure the location of the 15mm PRV discharge outlet pipe from the Heat Pump does not cause any hazards to the occupants of the premises or damage to the property from discharge, such as, above walkways.

If necessary, the discharge outlet must be piped away in a safe manner or covered by a condensate drain tray with a suitable drain connection. Make sure that selected materials can withstand the pressures and temperatures of the discharge medium Refer to *Figure 21* for location of the PRV outlet.

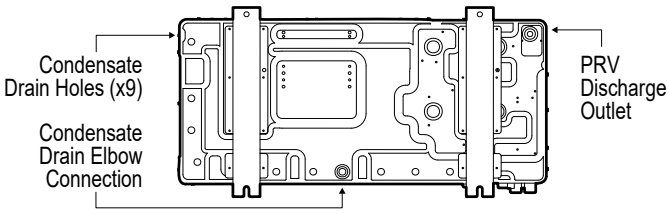

Figure 21. Heat Pump Base Panel Outlets (all models)

PRE-INSTALLATION

3.4 CYLINDER - INSTALLATION AREA

Make sure your selected product will fit in your selected location.

Examine the product dimensions “Overall width, depth and height” shown in *Table 2, Table 3 and Table 4* for your selected product.

Think through the clearances needed to move the product through the property to its final location and those needed in its final location. For example 100 mm either side of these dimensions may be required for manoeuvring the product but less may be required in its final location.

3.4.1 Product Location Considerations

Examine the product “Weight Full” *Table 2, Table 3 and Table 4* for your selected product.

Make sure that the floor of the chosen location can support at least more than this weight.

Make sure that the Mains water supply is Sufficient. Please review the guidance below and do a check on the water pressure and dynamic flow rate.

Guidance: Existing properties with a 15 mm supply will be satisfactory provided the local mains pressure is good, but should be confined to single bathroom properties. For new properties where simultaneous demand is required to more than one bathroom or a bathroom and one or more en-suites, the communication and service pipe into the dwelling should be a minimum of 22 mm (usually in the form of a 25 mm MDPE supply).

The optimum performance is achieved if the inlet pressure is 3 bar dynamic.

However, the Logic Air DHW Cylinder will function with lower inlet pressures, but this will reduce the performance. There should be a flow of at least 30 litres per minute or above available into the property. Normally the Logic air cylinder provides well in excess of 40 litres/min in most conditions. Flow rates for ALL mains pressure systems are subject to district pressures and system dynamic loss. Particularly on larger properties with more than one bathroom, the pipe sizes should be calculated in accordance with BS EN 806-3:2006 and BS 8558:2011.

Make sure that the selected location allows the following:

1. The discharge pipework for the safety valves must have a minimum fall of 1 : 200 from the unit to a safe discharge point.
2. All exposed pipework and fittings on the cylinder should be insulated, and the unit should NOT be fixed in a location where the contents could freeze. In new systems, pipes should be insulated to comply with building regs. The maximum permissible heat loss is indicated in the table below.

i. Primary circulation pipes for domestic hot water circuits should be insulated through their length, subject only to practical constraints imposed by the need to penetrate joists and other structural elements.

ii. All pipes connected to hot water storage vessels, should be insulated for at least 1 metre from their points of connection to the cylinder (or they should be insulated up to the point where they become concealed).

iii. In replacement systems, whenever a boiler or hot water storage vessel is replaced in an existing system, any pipes that are exposed as part of the work or are otherwise accessible should be insulated as recommended for new systems, or to some lesser standard where practical constraints dictate.

Insulation of pipework	
Pipe outside diameter	**Maximum heat loss**
15mm	7.89 W/m
22mm	9.12 W/m
28mm	10.07 W/m
35mm	11.08 W/m

ⓘ FURTHER GUIDANCE ON CONVERTING HEAT LOSS LIMITS TO INSULATION THICKNESS FOR SPECIFIC THERMAL CONDUCTIVITIES IS AVAILABLE IN TIMSA “HVAC GUIDANCE FOR ACHIEVING COMPLIANCE WITH PART L OF THE BUILDING REGULATIONS”.

ⓘ OUR CYLINDERS HAVE BEEN DESIGNED WITH 28 MM PIPEWORK IN MIND. THIS IS BASED UPON THE EXPECTATION THAT HIGHER FLOW RATES ARE REQUIRED ON HEAT PUMP SYSTEMS.

3.5 WATER SUPPLY REQUIREMENTS

The hot water cylinder must only been used for the storage of potable water supplied from the public mains. The water quality shall be in accordance with European Council Directive 98/83 EC, or revised version of the date of installation, and must not be fed with water from a private supply.

Water supply particulor requirements;

- Chloride content: Max 200 mg/l
- Sulphate content: Max 200 mg/l
- Combination chloride/sulphote. Max. 300 mg/l (in total)

If the newly fitted hot water cylinder is not in regular use, then it must be flushed through with fresh water for at least 15 minutes. Open at least one hot water taps once per week, during a period of at least four weeks.

3.6 CONTROL BOX - INSTALLATION AREA

3.6.1 Product Dimensions and Installation Clearances

⚠ **CAUTION: The product is not to be obstructed by any surrounding objects or surfaces as this can limit access and adversely affect performance. The minimum clearances that are shown in *Figure 15* should be always maintained.**

3.6.2 Determining Installation Area

The proposed installation site should be explained, discussed, and agreed with the client prior to the start of installation. It should be accessible for the specific end user for control of the heating system.

Both power cables and communication cable routing should be considered when selecting an installation site.

3.6.3 Requirements of Installation Area

ⓘ **IMPORTANT: It is the responsibility of the system installer to correctly install the cylinder in a space where all external components can be readily accessed and serviced.**

If installing a third-party cylinder and separate control box, refer to Section *2.4.1* for control box dimensions, access, and clearance requirements.

Precautions should be put in place to protect the control box from damage e.g. impact, splashing, etc.

The installation site is to be free from water, high levels of humidity, or debris as this can cause malfunction or damage in the control box. The installation site must not exceed the operating temperature or humidity tolerances given in *Table 1.*

The installation site must be free from the influence of electromagnetic, electrostatic, or magnetic fields, and not be mounted in direct sunlight.

The proposed installation site should be explained, discussed, and agreed with the client prior to the start of installation. The site must be accessible for the end user.

The installation site must consider the routing of power supply electrical cables and interconnecting cables for sensors. Make sure adequate segregation is achieved.

4.1 INSTALLATION OF HEAT PUMP

SCAN for link

4.1.1 Preparation of Installation Area

The installation site is to follow the requirements and be determined using the conditions outlined in Section *3.3.*

Figure 22 shows the dimensions of the mounting fixtures of the Heat Pump.

Ideal Heating offer anti-vibration mounting feet for the Logic Air Heat Pump which will provide both vibration protection and the necessary minimum ground clearance requirements.

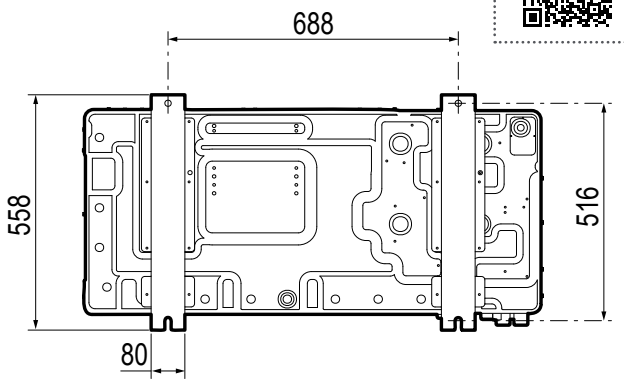

Figure 22. Dimensions of Mounting Fixtures (all models)

4.1.2 Floor Mounting

4.1.2.1 Mounting Foundation

A level mounting foundation must be prepared, and it is to be structurally sound and designed to not structurally degrade over time. It is to be of stable and solid construction following structural engineering principles and it must easily support the weight of the Heat Pump.

The Heat Pump must be raised to at least 5 cm above the ground level. In areas prone to snow, this height should be increased but should not exceed 100 cm from ground level.

⚠ CAUTION: To not impede the performance of the Heat Pump it must be made sure that the foundation is level. Failure to meet this requirement may compromise the unit's ability to correctly drain condensate and negatively affect the operation of the refrigerant circuit.

4.1.2.2 Condensate Disposal into Ground

If the condensate is to be disposed of into the ground then it is to be disposed of into an appropriate soak-away.

If the Heat Pump is to be ground-mounted above a non-permeable surface, such as concrete, a localised condensate disposal method is to be installed into a nearby rainwater gully. Refer to Section *4.1.5*.

INSTALLATION

4.1.3 Receival and Unpacking

⚠ CAUTION: Use a suitable means of transporting the Heat Pump. The appliance MUST remain upright and not be tilted more than 45° to prevent damage to the internal sealed circuit of the Heat Pump.

⚠ CAUTION: The product is not to be manoeuvred via the packaging straps. The packaging straps are not designed to carry the weight of the packaged unit and will may break potentially causing injury to handlers or damage to the product.

Packaging Symbols

The below symbols and conditions must always be followed for the packaged product.

	Take caution with this package as the load is unbalanced
	Vertical stacking limit x 3
	Do not tilt the package
	This package is to be kept upright
	Product must be treated as fragile
	Flammable contents
	Keep package away from water and rain
	Product should not be discarded as unsorted waste but must be sent to separate collection facilities for recovery and recycling

⚠ WARNING: Packaging straps are tightly secured and can release a lot of kinetic energy when cut. Hold straps firmly and apply caution when cutting and keep body away during cutting to avoid injury.

The packaging is to be removed by following the below sequence:

1. Remove packaging straps by cutting them away from the body.
2. Lift lid from packaging and evenly lift cardboard surround sleeve.
3. Remove polystyrene corner support pieces.

⚠ WARNING: The protective plastic bag can accumulate a lot of static charge. Appropriate measures should be taken in hazardous areas.

4. Remove protective plastic bag from the Heat Pump and secure with the rest of the packaging.
5. Once the Heat Pump is ready to be mounted it can be lifted from the base.
6. It is the responsibility of the system installer to correctly dispose and recycle the product packaging.

After the product is unpacked, make sure that all the contents are present.

Quantity	Item Description
1	Logic Air Monobloc Heat Pump
1	Documentation Package
1	ErP Label
1	Condensate Collection Elbow
9	Condensate Plugs

ⓘ IMPORTANT: If there are any missing items, contact Ideal Heating.

INSTALLATION

4.1.4 Lifting and Handling

⚠ CAUTION: Use a suitable means of transporting the Heat Pump. The appliance MUST remain upright and not be tilted more than 45° to prevent damage to the internal sealed circuit of the Heat Pump.

If lifting manually use the hand holds provided as shown in *Figure 23 and Figure 24*.

⚠ WARNING: Handlers must be aware and capable of good manual handling techniques and practise them during the handling of the Heat Pump.

Once moved onto the foundation, the Heat Pump is to be fixed with vibration resistant fastenings to prevent gradually loosening over time. There must be some method of vibration absorption to prevent vibration from damaging the mounting foundation.

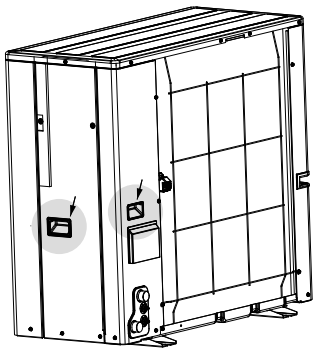

Figure 23. Hand Holds (Rear/Side)

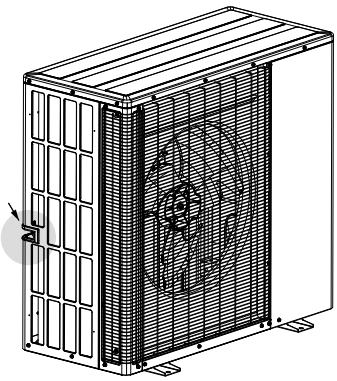

Figure 24. Hand Holds (Side)

4.1.5 Condensate Disposal

⚠ WARNING: The Logic Air Heat Pump may generate a large volume of condensate water. The condensate water MUST be disposed of in a safe manner avoiding freezing on walkways and surfaces.

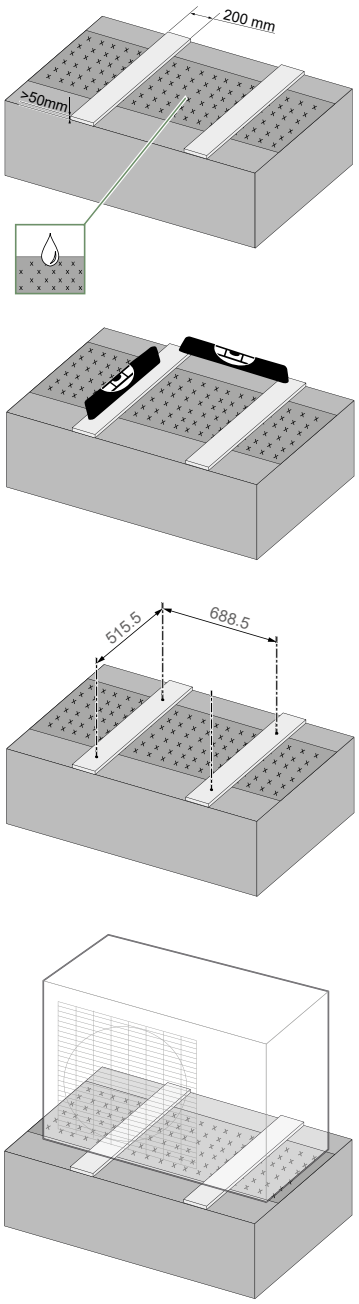

Figure 25. Heat Pump Permeable Base Installation

INSTALLATION OPTION 1

Logic Air Heat Pump installed on a permeable base i.e. gravel or sand soakaway etc. which will allow the condensate to drain freely. Refer to *Figure 25.*

YES

No additional condensate drain requirements.

INSTALLATION OPTION 2

Logic Air Heat Pump installed on a NON permeable base such as concrete, patio or paving blocks etc. which may restrict condensate drainage and increase the potential for the condensate freezing.

YES

SOLUTION A

Install the nine Condensate Drain plugs (supplied) in the Heat Pump base panel, refer to *Figure 27.*

Install the Condensate Drain Elbow (supplied) into the drain connection point in the Heat Pump base panel, refer to *Figure 26.*

Install condensate drain pipework (not supplied) to a suitable drainage point.

Condensate discharge pipework must be protected from freezing.

SOLUTION B

Install the Logic Air Condensate Drain Tray underneath the Logic Air Heat Pump.

Install the Condensate Drain Elbow (supplied) into the tray drain connection point.

Install condensate drain pipework (not supplied) to a suitable drainage point.

Condensate discharge pipework must be protected from freezing.

NO

If the appliance is installed in a region where the temperature may fall below +3 °C for long periods. A Condensate Trace Heating kit should be installed to prevent freezing.

YES

SOLUTION A

Install Trace Heating to the internal surface of the base panel on the Logic Air Heat Pump as per kit instructions.

SOLUTION B

Install Trace Heating to the internal surface of the condensate drain tray as per kit instructions.

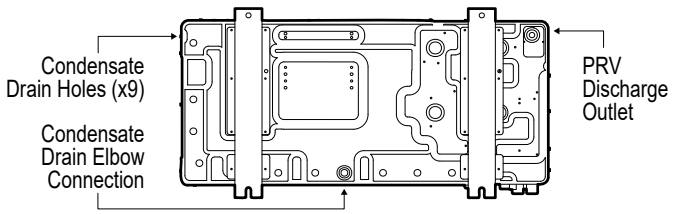

Figure 26. Heat Pump Base Panel Outlets (all models)

INSTALLATION

4.1.6 Hydronic Connections

⚠ CAUTION: To prevent blockage, care should be taken to prevent solids, metal fillings, sealing tape, and any other contaminant from entering the heating circuit. Before connection to the heating system, the pipework should be thoroughly cleaned in accordance with BS7593:2019 to remove any contaminant.

The installation of the hydronic pipework must comply with local directives and guidelines.

To optimise performance, the length of pipes between the Heat Pump and the indoor system must be kept as short as is possible and the resistance of the circuit should be minimised by using the fewest number of elbows and pipe fixtures.

Suitable seals (fibre gasket, O-rings) are to be used in appropriate applications. Where thread sealant is required use PTFE tape, or sealing pastes (synthetic, dependant on application). Face seal connections are to be tightened with 15 Nm to 35 Nm.

Hydronic connections must be made by braided hoses to => 28 mm diameter copper pipe for the 8 & 10 kW models and => 22 mm diameter copper pipe for the 4 & 5 kW models. The diameter of the pipe is to be calculated based on the flow rate and length requirements of the hydronic system. Consideration of the internal diameter of selected pipework must be taken into account when calculating the system resistance and water velocities at the specified design flow rates.

The water velocity in the pipe should be kept within the design limits of the material used to avoid erosion, corrosion, and excessive noise generation.

⚠ CAUTION: When connecting metal pipes of different materials, be sure to insulate the connections to prevent galvanic corrosion.

It must be made sure that there is no transfer of vibration to the dwelling or heating system. To protect the heating system from vibration, braided hoses must be installed between the Heat Pump and rigid pipework to prevent vibration from being transferred to the system.

Local to the Heat Pump there should be means of isolation and drainage to allow for temporary decommissioning. External pipework must be insulated with UV/moisture resistant insulation and have a wall thickness of ≥ 19mm.

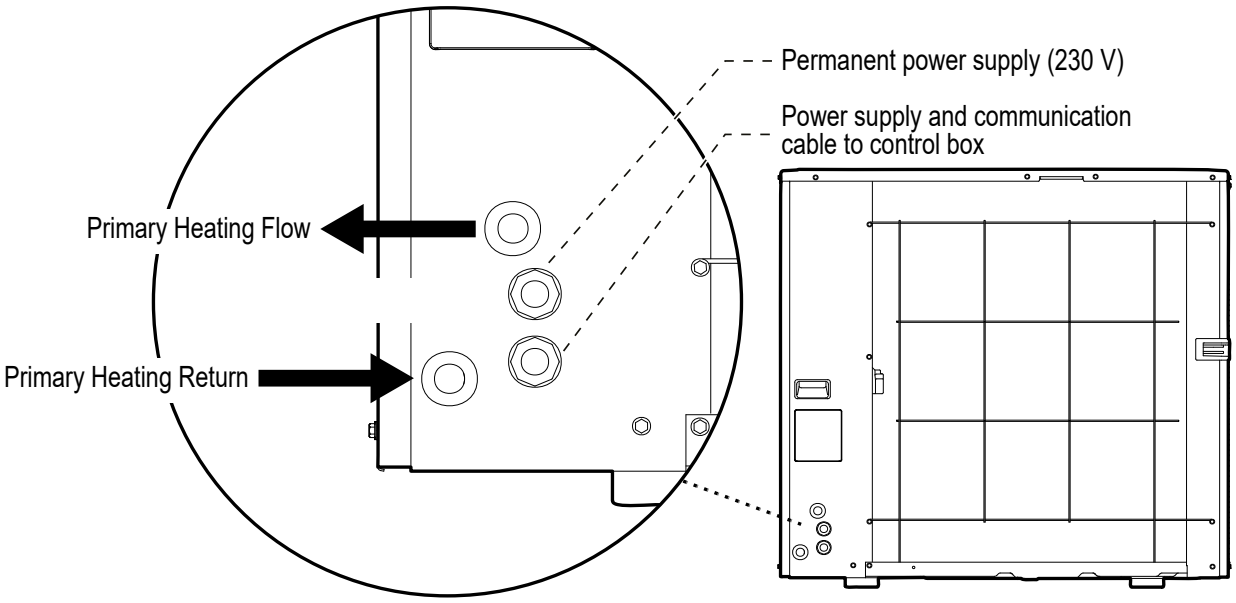

Figure 27. Primary Heating Connections

4.1.7 Accessing the Casing

The side panel is removable for the installation of the electrical supply.

To remove the panel follow steps 1 to 3 and to refit the panel follow steps 4 to 7:

1. To remove the panel, the 4 lower screws shown in *Figure 28* are removed using an appropriate tool.
2. The top screw is then to be removed whilst holding onto the panel handle to prevent sudden drop of the panel.
3. The panel can then be slid down and the bottom angled outwards for removal.
4. To refit the panel, it must be angled to locate the top of the panel into the gap and then pushed flat against the unit.
5. The panel is then to slide upwards. If the panel is not flat to the unit at this stage, it must be moved downwards and then back upwards until it engages with the unit and fits flat with the casing.
6. Fit the top screw first to retain the panel position.
7. Fit the remaining 4 screws.

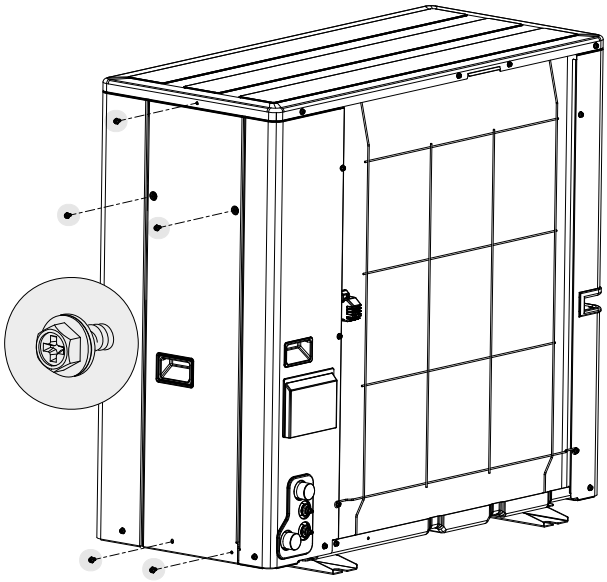

Figure 28. Heat Pump - Panel Removal

4.1.8 Electrical Installation

⚠ WARNING: All electrical work is to be undertaken by a competent electrician. The electrical supply is to be switched off with appropriate safety measures in place to prevent accidental activation. The electrical installation must be done on the Heat Pump first and connection to the supply must be the last connection made to reduce risk of electric shock.

The electrical installation is only to be undertaken once all other installation operations prior to this section have been completed.

Electrical installations must comply with the requirements and guidance of the IET Wiring Regulations BS 7671 or equivalent, and these guidelines are to be used to determine the cross-sectional area of the electrical cable.

The electrical installation must be installed in accordance with the specification in *Table 1 on page 8*.

⚠ CAUTION: Incorrect installation of the electrical supply can lead to the destruction of the electrical power in the Heat Pump and any other unit that it is connected to.

The Heat Pump is to be supplied directly from the consumer unit using protected cable via a dedicated rotary isolator. The Heat Pump supply line must not contain a plug-type connection.

The electrical supply for the outdoor unit is to be taken from a type B or F RCD (residual current device) protected circuit and must have a Type-C curve cut-out device (circuit-breaker, fuse) compliant with the local installation rules in force.

There is to be an isolation switch, that when operated will switch off all poles, installed local to the Heat Pump.

⚠ WARNING: This product must be earthed, and it must not be possible to disconnect the protective conductor through any isolator switches.

The system requires a 230 V power supply for the Logic Air Monobloc Heat Pump. If a hot water cylinder with immersion heater is fitted a second 230 V supply is required to be supplied to the heat pump control box.

4.1.9 Routing the Electrical Cables

Cables that are connecting to the Heat Pump are to be routed through the cable glands and conduit to the circuit board as shown in *Figure 34*.

⚠ CAUTION: When routing cables, care should be taken to make sure that water is not able to run down the cables and enter the product by making sure that the cable is routed downwards after leaving the product and that the cable glands are tightly fitted.

Figure 29. Routing the Cables

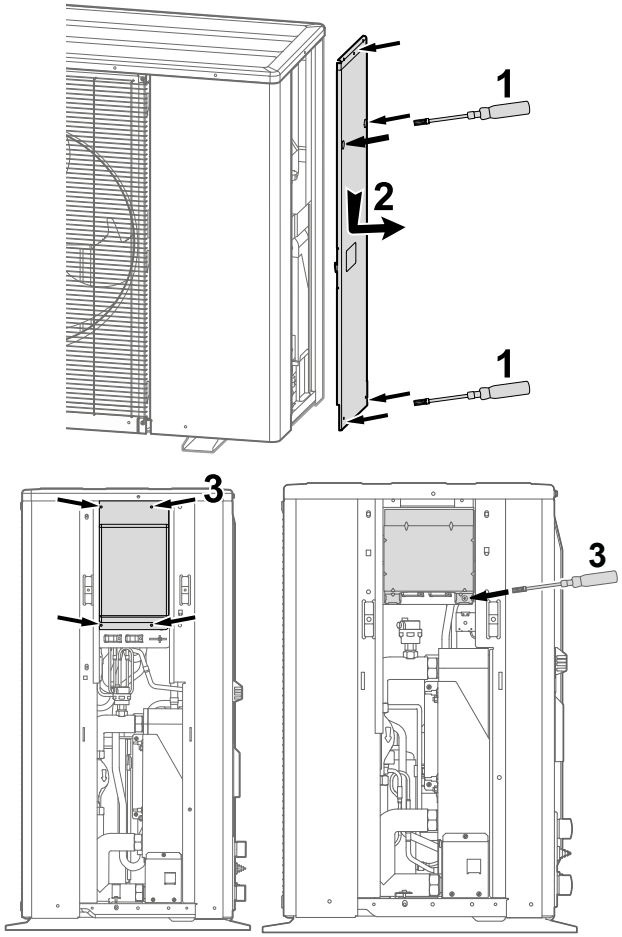

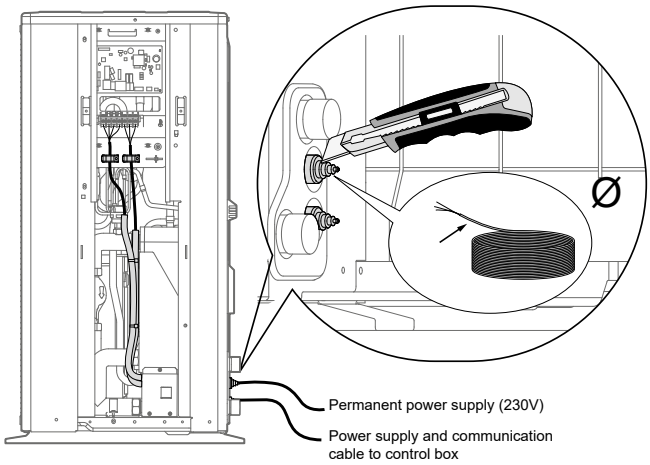

When making connections to the electrical terminals make sure that there is no exposed copper wire and connections are made in accordance with IET regulations.

The supply connections are shown in *Figure 32, Figure 33 and Figure 36* and secured by the securing clip below the terminal.

Communication wires are shown in *Figure 32, Figure 33 and Figure 36* and secured by the securing clip below the terminal.

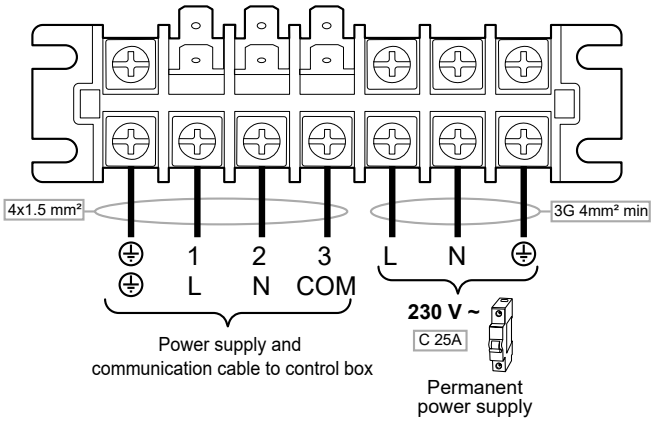

Figure 30. Connections to Heat Pump Terminal Block 8/10 kW model

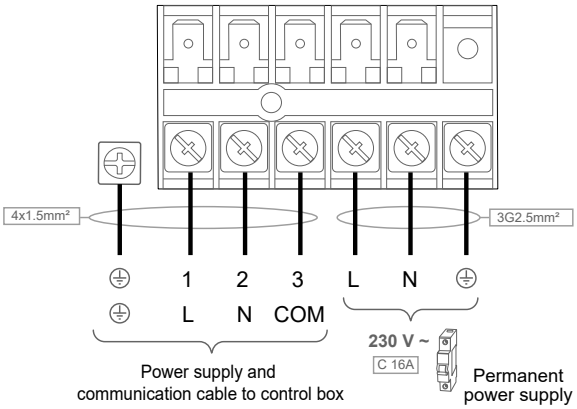

Figure 31. Connections to Heat Pump Terminal Block 4/5 kW models

Multi core cables should be stripped back by at least 60mm to allow for easy connection and to reduce strain on the terminals. Once all connections have been made, the cables are to be secured using the cable securing clamps at the base of the control board, to prevent stress on the terminals.

It is important to maintain the neutral-phase polarity of the Heat Pump. The earth continuity must be maintained, and the earthing wire is to be longer than the other wires. Make sure that electrical connecitons are made in accordance with IET regulations.

⚠ WARNING: Failure to do electrical safety tests to verify the circuit has a higher risk of damage to the products and electric shock.

Upon completion of the electrical connections, electrical safety tests are to be done to verify the integrity of the circuit. These tests are to be done by a competent electrician in accordance with IET guidelines.

INSTALLATION

4.2 INSTALLATION OF INDOOR DHW CYLINDER

4.2.1 Receival and Unpacking

Packaging Symbols

The below symbols and conditions must always be followed for the packaged product.

	Take caution with this package as the load is unbalanced
	Do not tilt the package
	Product must be treated as fragile
	Keep package away from water and rain
	Product should not be discarded as unsorted waste but must be sent to separate collection facilities for recovery and recycling

ⓘ **IMPORTANT: The DHW Cylinder MUST be kept upright at ALL times.**

⚠ **WARNING: Packaging straps are tightly secured and can release a lot of kinetic energy when cut. Hold straps firmly and apply caution when cutting and keep body away during cutting to avoid injury.**

The cylinder is supplied fixed to a wooden pallet with a cardboard sleeving / packaging and is to be removed in following the below sequence:

1. Remove the packaging straps by cutting them away from the body.
2. Lift the cardboard outer lid from the packaging.
3. Remove the inner cardboard cylinder cover.
4. Remove the inner cardboard corner supports.
5. Remove the outer cardboard sleeves.
6. Remove the mechanical fixings securing the cylinder to the pallet. The Cylinder can now be removed from the pallet.

It is the responsibility of the system installer to correctly dispose and recycle the product packaging.

After the product is unpacked, make sure that all the contents listed below are present.

Quantity	Item Description
1	Logic Air Cylinder**
1	Outdoor Temperature Sensor (QAC34)
1	Documentation Package
1	Auxiliary Devices (Thermistor etc.)

**Contents will depend on the cylinder type and options selected (refer to *Table 8 on page 21*)

4.2.2 Lifting and Handling

The Logic Air DHW Cylinder must be handled with care and stored the correct way up in a dry place. Any manual handling/lifting operations will need to comply with the requirements of the Manual Handling Operations Regulations issued by the H.S.E. The appliance is supplied attached to a small pallet, and can be move around on smooth level surfaces using a pallet truck. In more confined spaces the appliance can be moved using a sack truck on the rear face although care should be taken and the route should be even. In apartment buildings containing a number of storeys we would recommend that the appliances are moved vertically in a mechanical lift. If it is proposed to use a crane, expert advice should be obtained regarding the need for slings, lifting beams etc.

4.2.3 Hydronic Connections

4.2.3.1 Performance Recommendations

The highest hot or cold water draw off point should not exceed 10 metres above the Pressure Reducing Valve.

In larger properties with a number of bathrooms/en-suites and long pipe runs we would recommend that the balanced cold supply is provided with its own pressure reducing valve and is not taken from the balanced cold connection on the combination valve. In this case it will also be necessary to fit a small expansion vessel on the balanced cold water system to accommodate the pressure rise caused by the increase in temperature of the balanced cold water. Check the performance requirements of the terminal fittings with regard to flow/pressure are suitable. Aerated taps are recommended to prevent splashing.

4.2.3.2 Shower Fitting Guidance

Any type of shower mixing valve can be used as long as both the hot and cold supplies are mains fed. However, all mains pressure systems are subject to dynamic changes particularly when other hot and cold taps/showers are opened and closed, which will cause changes in the water temperature at mixed water outlets such as showers.

We recommend the use of thermostatic showers with this appliance. These must be used in 3 storey properties where the impact on pressure/ temperature of opening another tap in the system is greater than normal. The shower head provided must also be suitable for mains pressure supplies.

4.2.3.3 Pipe Layout

In all mains pressure installations it is important to remember that the incoming cold supply must be shared between all terminal fittings. It is important that a 22mm supply is brought to the appliance and a 22mm take-off is continued at least to the bath. If there are two baths, 28mm pipework should be considered. One metre of smaller diameter pipework, or flow restrictors, should be provided on the final connection to all outlets so as to balance the water available. In any event the distribution pipework should generally be in accordance with BS EN 806-1 to 5.

4.2.3.4 Plastic Pipework

This appliance is suitable for use with plastic pipework as long as the material is recommended for the purpose by the manufacturer and is installed fully in accordance with their recommendations.

4.2.3.5 Secondary Hot Water Circulation

All models 210 and above are fitted with a secondary return tapping as standard. If fitted, an extra expansion vessel may be necessary. A non-return valve MUST be FITTED near the return connection. No valve or terminal fitting should be installed between the non return valve and the cylinder.

All pipes kept hot by the secondary circulation MUST be insulated.

4.2.4 Pressure and Temperature/Expansion Relief Valve Pipework

The relief valve should be installed to discharge in accordance with G3 of the Approved Document of the UK Building Regulations or appropriate regulatory body and should be piped to where it is visible, but will not cause danger to persons or damage to materials.

The following information is taken from Approved Document G3 of the Building Regulations and is provided to assist with the design and installation of the discharge pipework. However, the information is not exhaustive and reference should always be made to Approved Document G3 of the UK Building Regulations. The final decision regarding any arrangements rests with Building Control or appropriate regulatory body and it is recommended that their advice is sought if you have any concerns regarding this aspect of the installation.

The two safety valves will only discharge water under fault conditions. When operating normally water will not be discharged.

The tundish should be vertical, located in the same space as the unvented hot water storage system and be fitted as close as possible and within 600mm of the safety device e.g. the temperature relief valve.

The discharge pipe (D2) from the tundish should terminate in a safe place where there is no risk to persons in the vicinity of the discharge, or other material that has been demonstrated to be capable of safely withstanding temperatures of the water discharged and is clearly and permanently marked to identify the product and performance standard and:

A. Be at least one pipe size larger than the nominal outlet size of the safety device unless its total equivalent hydraulic resistance exceeds that of a straight pipe 9m long i.e. discharge pipes between 9m and 18m equivalent resistance length should be at least two sizes larger than the nominal outlet size of the safety device, between 18 and 27m at least 3 sizes larger, and so on. Bends must be taken into account in calculating the flow resistance. Refer to the *Table 10* and the worked example.

   An alternative approach for sizing discharge pipes would be to follow BS EN 806-2:2005 Specification for design installation, testing and maintenance of services supplying water for domestic use within buildings and their curtilages.

B. Have a vertical section of pipe at least 300mm long, below the tundish before any elbows or bends in the pipe work.

C. Be installed with a continuous fall.

D. It is preferable for the discharge to be visible at both the tundish and the final point of discharge but where this is not possible or practically difficult there should be clear visibility at one or other of these locations. Examples of acceptable discharge arrangements are:

   1. Ideally below the fixed grating and above the water seal in a trapped gulley.
   2. Downward discharges at a low level; i.e. up to 100 mm above external surfaces such as car parks, hard standings, grassed areas etc are acceptable providing that where children play or otherwise come into contact with discharges, a wire cage or similar guard is positioned to prevent contact whilst maintaining visibility.
   3. Discharges at a high level; e.g. into metal hopper and metal down pipe with the end of the discharge pipe clearly visible (tundish visible or not) or onto a roof capable of withstanding high temperature discharges of water and 3 m from any plastic guttering systems that would collect such discharges.
   4. Where a single common discharge pipe serves more than one system, it should be at least one pipe size larger than the largest individual discharge pipe (D2) to be connected.

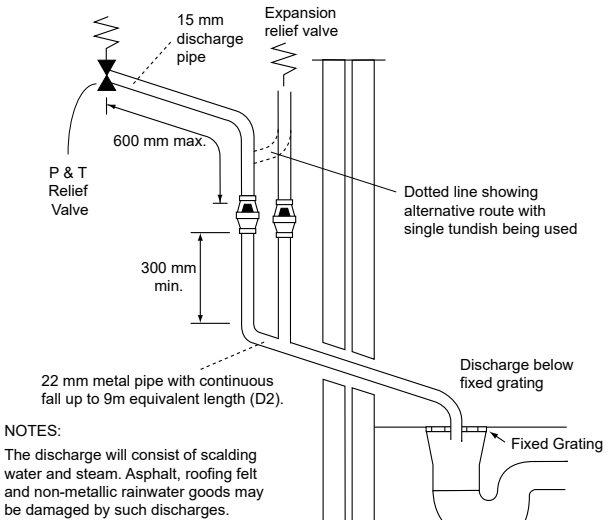

Figure 32. Typical Discharge Pipe Arrangement

Worked Example

The example below is for G1/2 temperature relief valve with a discharge pipe (D2) having 4 elbows and length of 7m from the tundish to the point of discharge.

From *Table 10*:

Maximum resistance allowed for a straight length of 22mm copper discharge pipe (D2) from a G1/2 temperature relief valve is: 9m subtract the resistance for 4 x 22mm elbows at 0.8m each = 3.2m.

Therefore the maximum permitted length equates to: 5.8m.

5.8m is less than the actual length of 7m therefore calculate the next largest size.

Maximum resistance allowed for a straight length of 28mm pipe (D2) from a G1/2 temperature relief valve equates to: 14m.

As the actual length is 7m, a 28mm (D2) copper pipe will be satisfactory.

Table 10 Sizing of Copper Discharge Pipe

Sizing of copper discharge pipe 'D2' for a temperature relief valve with a G1/2 outlet size (as supplied)		
Size of discharge pipework	Maximum length of straight pipe (no bends or elbows)	Deduct the figure below from the maximum length for each bend or elbow in the discharge pipe
22mm	Up to 9m	0.8m
28mm	Up to 18m	1m
35mm	Up to 27m	1.4m

5. If unvented hot water storage systems are installed where discharges form safety devices may not be apparent i.e. in dwellings occupied by blind, infirm or disabled people, consideration should be given to the installation of an electronically operated device to warn when discharge takes place.

INSTALLATION

Safety

The safety devices supplied or fitted on an StainlessLite Plus are selected for their suitability for the temperatures and pressures involved. They must not be changed, removed or by-passed and it is essential that only genuine replacement parts supplied or approved by Ideal heating Ltd are used. All parts are available to approved installers from Ideal heating spares department (Telephone 01482 498663).

Combination Inlet Group

Combines elements 1, 2 and 3 below.

1. Pressure Reducing Valve - The cold water supply to any mixer taps/showers must be taken from the cold water tapping of this valve to ensure balanced hot and cold pressures. This valve is factory set to ensure the correct operating pressure for the Logic Air Cylinder.
2. Non Return Valve - This is integral with the pressure reducing valve to prevent backflow of hot water towards cold water draw off points.
3. Cold Water Expansion Relief Valve - This safety device is preset at the factory and will relieve excess cold water pressure resulting from a fault condition.

Line Strainer

This is integral within the combination inlet group to reduce the likelihood of contaminants fouling the valve seat. Following installation; Isolate the cold supply to the cylinder. Remove the inlet control group valve. Inspect the gauze filter on the inlet side of the valve and remove the debris.

Tundish

This is to allow the discharge from any Relief Valve to be seen. It must be fitted away from any electrical devices. See page 36 for discharge pipework details.

Expansion Vessels Installation

To prevent water stagnation and particulate accumulation affecting water quality, it is recommended that the expansion vessel be installed in the vertical orientation so that the fitting accommodating thermal expansion or a pressure surge is:-

1. bottom fed and upright; and
2. that the connecting pipework to the fitting:-
   - rises continuously; and
   - is kept to a minimum;

There must be no valve on the pipe work between the expansion vessels and the unvented cylinder which could prevent the expansion of the water contained in the unvented cylinder reaching the expansion vessels.

Temperature/Pressure Relief Valve

This safety device is also pre-set at the factory and relieves before the temperature reaches 100°C. It is also a Pressure Relief Valve, and is pre-set to 6 bar.

4.2.5 Immersion Heater Wiring

⚠ WARNING: Danger of electrocution: before making any adjustments to the thermostat isolate the immersion heater from the mains electricity supply at the fuse spur unit.

The immersion heater supplied with Heat pump products is set to position Max; so will operate in the range 68 °C ± 3 °C.

The immersion heater thermostat should be left on set max; If the immersion heater thermostat is set too low the Legionella Cycle will fail to complete correctly.

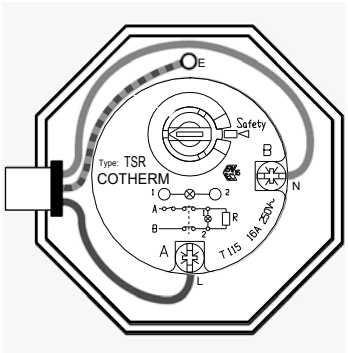

Figure 33. Immersion Heater Wiring

Immersion Heater

The immersion heaters fitted to our units are 3kW 240V ~AC. Check that the mains supply conforms to this, and all external wiring conforms to the most recent revision of the IEE wiring regulations. An Incoloy element is used on this product for standard domestic use and water conditions.

The immersion heater is fitted into the hot water cylinder using an O-ring. After the unit is filled with water check for leaks to determine if the O-ring has sealed and tighten carefully using the appropriate tool. To prevent damage to the O ring do not use excessive force to tighten the immersion heater.

The immersion heater is supplied with a thermostat which has been tested for operation in the cylinder and complies with the European directives for Electromagnetic compatibility and radio interference. It is Rated at 16 Amp 250V ~AC.

The immersion thermostat has two terminals A and B. The Live (brown) wire should be connected to terminal A and the Neutral (blue) wire should be connected to terminal B. It has been our experience that Crimp terminals make better connections. The immersion heater must be fully earthed (earth post) and connected via a double pole isolator switch having a contact separation at least 3mm, see diagram above.

The immersion heater thermostats incorporate a manual reset safety/overheat cut out thermostat. Should this operate, investigate the cause for the operation cut out before pressing the red reset button labelled safety. If there is no apparent fault adjust the control setting down slightly to prevent nuisance tripping.

If another heat source is used to heat the cylinder and this is allowed to raise the water temperature excessively then the overheat thermostat will trip. This is likely on solar thermal products when the solar thermostats are set at high temperatures.

All Duo cylinders are fitted with a 3 kW immersion heater so that the store temperature can be raised above that which the heat pump provides, to boost the hot water performance if necessary and to protect against legionella eg. following the time parameters set on the Heat Pump remote control.

Control/Overheat Dual Thermostats

Care must be taken to ensure that the probes are fully inserted into the pockets provided.

4.3 INSTALLATION OF CONTROL BOX

4.3.1 Receival and Unpacking and Handling

Note: Section *4.3.1* is only applicable if using a non pre-plumbed cylinder, as the control box will be packaged and supplied separately.

Packaging Symbols

Below are the symbols on the packaging of the control box when supplied as an individual unit. The below symbols and conditions must always be followed for the packaged product.

	Stackable height x 3
	This package is recyclable
	Product must be treated as fragile
	Product should not be discarded as unsorted waste but must be sent to separate collection facilities for recovery and recycling

Contents of Package. Checklist.

After the product is unpacked, make sure that all the contents are present.

Quantity	Item Description
1	Logic Air Control Box
1	Literature Pack
2	22 mm Flow and Return Thermistors
2	28 mm Flow and Return Thermistors
2	Thermistor Cables 5 m
1	Outside Temp Sensor (QAC34)
1	Wall Mounted Fixing Kit
1	DHW Thermistor Cable 2 m
1	Connector Kit

ⓘ **IMPORTANT: If there are any missing items, contact Ideal Heating.**

INSTALLATION

4.3.2 Removal of the Front Panel

To allow for the controller to be mounted first the front panel must be removed, by removing the 4 fixings displayed in *Figure 34*.

To refit the front panel, rest the top of the panel on the top of the control box and make sure that the sides of the front panel are external to the control box. Then reinsert and tighten the 4 fixings, starting with the top fixings. Do not over tighten to avoid damage to the front panel.

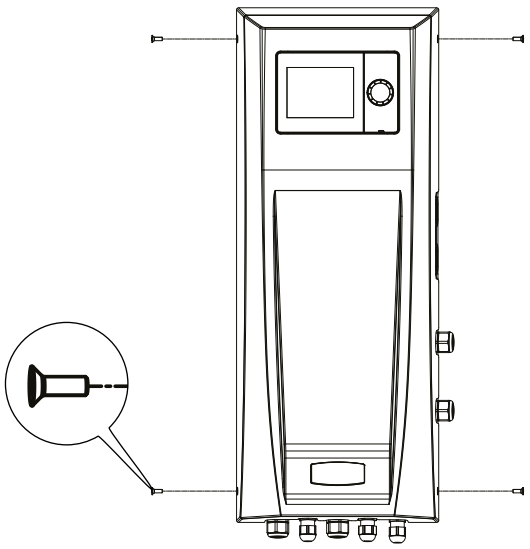

Figure 34. Front Panel Removal

4.3.3 Mounting

Note: Section *4.3.1* is only applicable if using a non pre-plumbed cylinder, as the control box will be packaged and supplied separately.

Hang the wall mounting template supplied on the wall, using a spirit level.

The control box is to be mounted using 4 fixing holes which are indicated in *Figure 35* onto the wall mounting template.

It is the responsibility of the installer to determine appropriate fixings for fitting the control box and being held by the wall material. Once fixed, the control box should be rigid and sturdy.

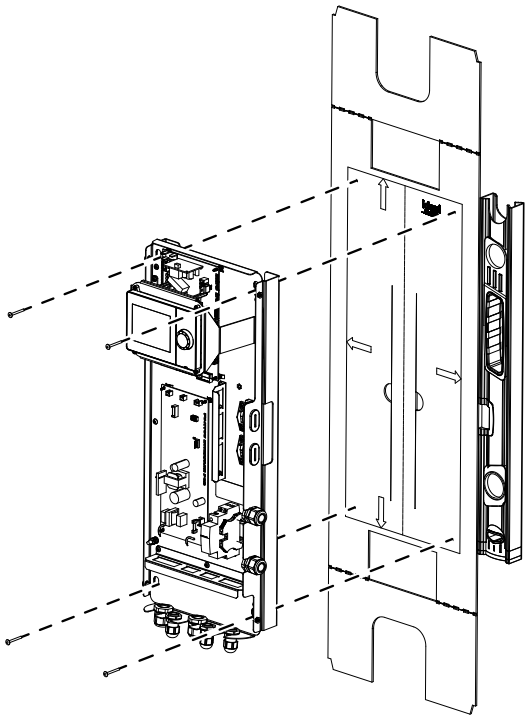

Figure 35. Front Panel Mounting

4.3.4 Electrical Installation

⚠ WARNING: All electrical work is to be done by a competent electrician. The electrical supply is to be switched off with appropriate safety measures in place to prevent accidental activation. The electrical installation must be done on the Heat Pump first and connection to the supply must be the last connection made to reduce risk of electric shock.

⚠ WARNING: This product must be earthed, and it must not be possible to disconnect the protective conductor through any isolator switches.

Electrical installations must comply with the requirements and guidance of the IET Wiring Regulations BS 7671, and these guidelines are to be used to determine the cross-sectional area of the electrical cable.

The electrical installation must be installed in accordance with the specification in *Table 1 on page 8*.

⚠ CAUTION: Incorrect installation of the electrical supply can lead to the destruction of the electrical components in the Heat Pump and any other unit that it is connected to.

Cables that are connecting to the Heat Pump are to be routed through the cable glands and through to the circuit board as shown in *Figure 29*. Power cables and communication/signal cables must be separated by a minimum distance of 100mm and routed through separate gland to prevent electrical interference.

⚠ CAUTION: When routing cables, care should be taken to make sure that water is not able to run down the cables and enter the product by making sure that the cable is routed downwards after leaving the product and that the cable glands are tightly fitted.

Connections are to be made using the plastic terminal connectors supplied within the control box. When making connections to the electrical terminals make sure that there is no exposed copper wire.

Multi core cables should be stripped back by at least 60mm to allow for easy connection and to reduce strain on the terminals. Once all connections have been made, the cables are to be secured using the cable securing clamps at the base of the control board, to prevent stress on the terminals.

4.3.5 Control Box Internal Wiring

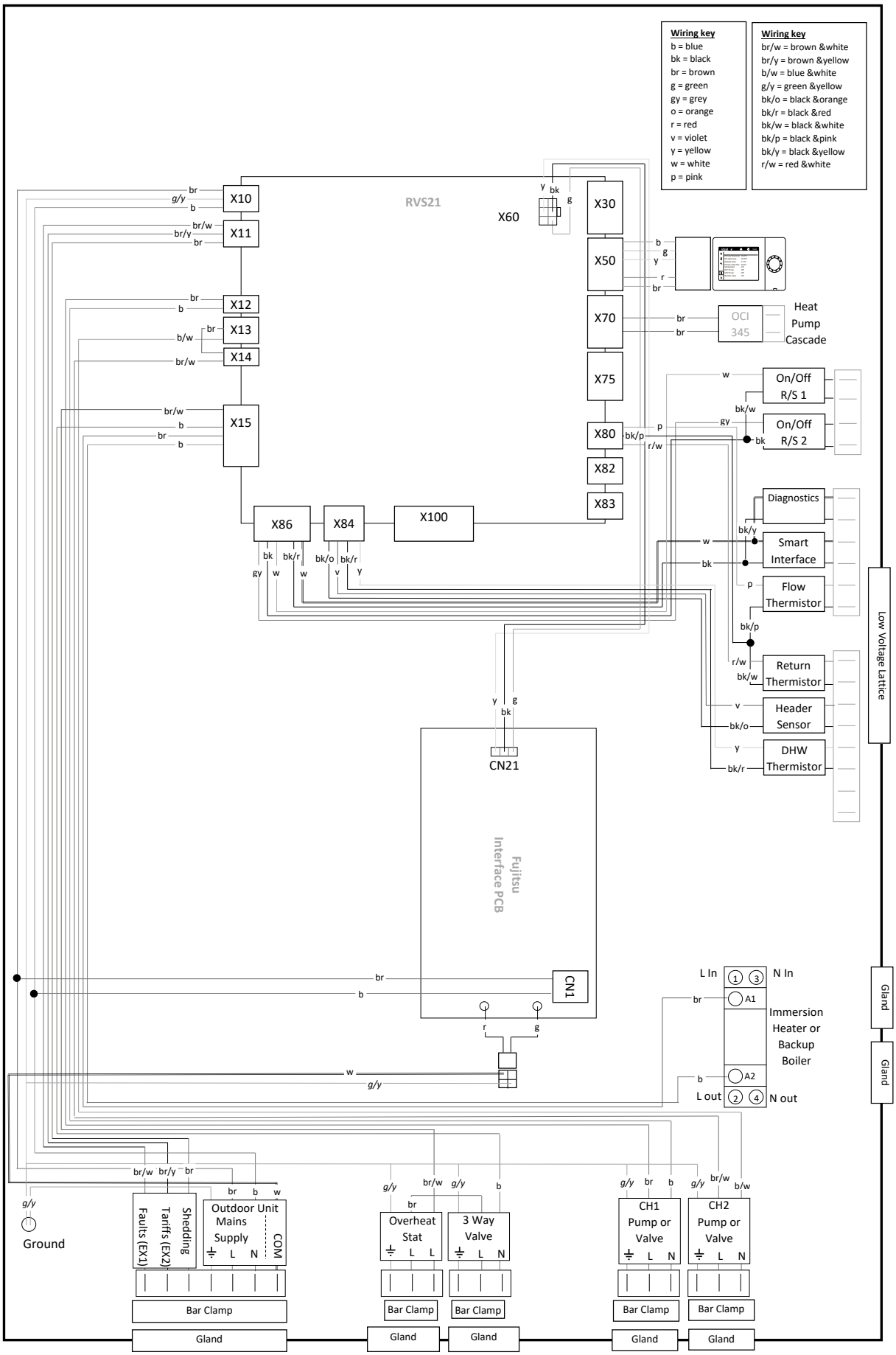

Figure 36. Control Box - Internal Wiring

4.3.6 Contactor Diagram

ⓘ **IMPORTANT: If using a combustion boiler as the back up heater, refer to the boiler installation manual for wiring details.**

Remove pre-fitted blue wire from connection A2, before wiring immersion heater to connection 2. Then reconnect pre-fitted wire to A2.

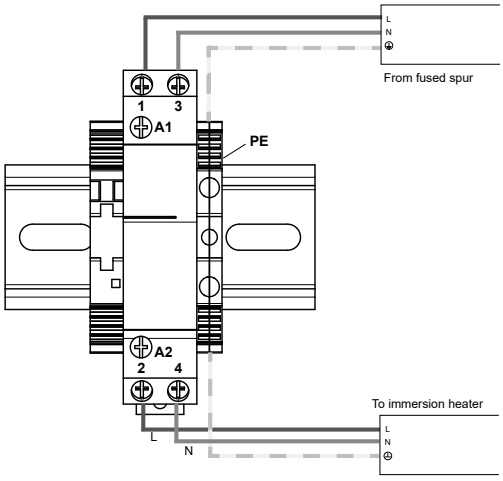

Figure 37. Contactor Diagram

4.3.7 Installer Wiring Connections

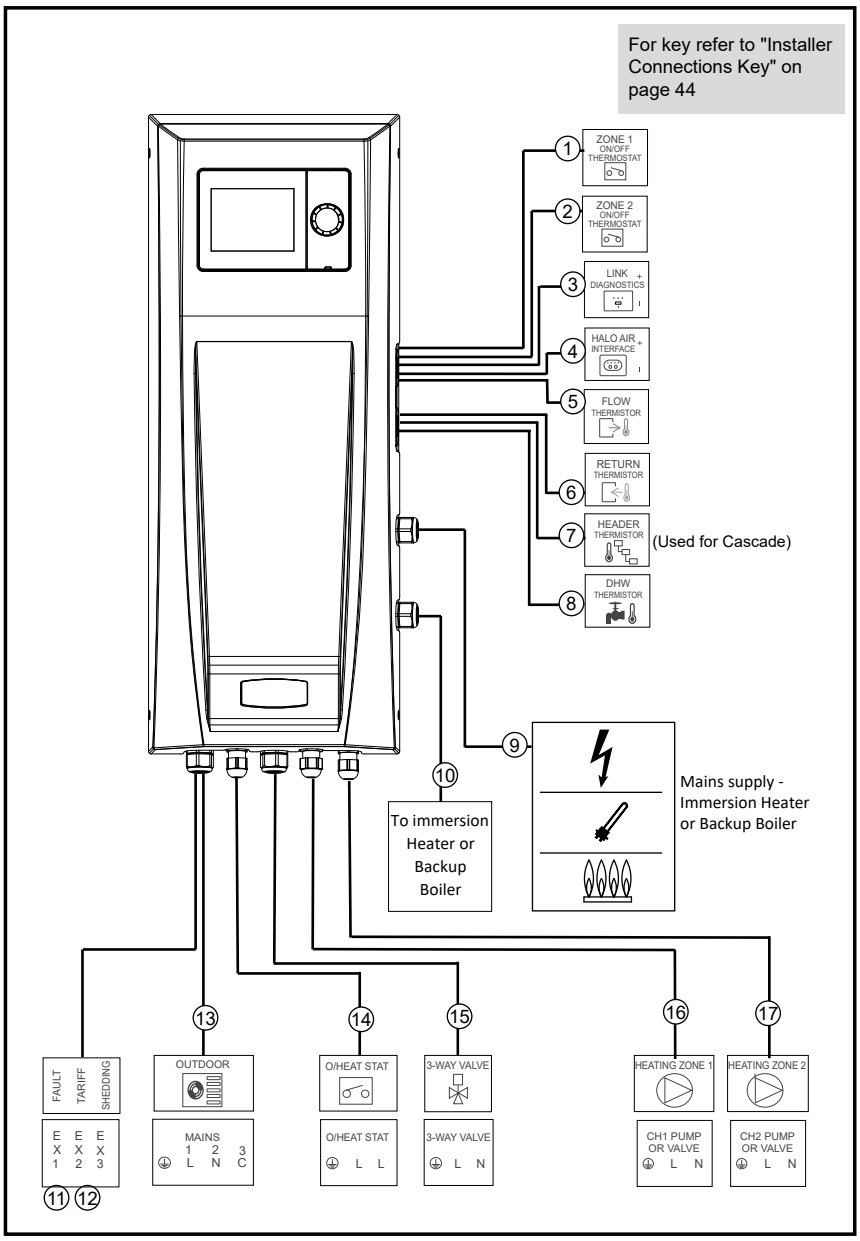

Figure 38. Installer Wiring Connections (refer to Section *4.3.7.1 for description of connections)*

INSTALLATION

4.3.7.1 Installer Connections Key

1. Zone 1 ON/OFF Programmable Thermostat:

Note. If installing a Halo Interface with an On/Off Programmable Thermostat on a 2 zone system please refer to Section *5.7.3 on page 65*.

The ON/OFF programmable thermostat, when used for the single space heating circuit or space heating Zone 1, must be attached to the the ZONE 1 ON/OFF THERMOSTAT connection. If a non-programmable room thermostat is used, then you must make sure that the applicable heating schedule is set at the Logic Air controller. Refer to *Figure 38 on page 43* and Section *5.5 Activation of System - Quick Setup.*

2. Zone 2 ON/OFF Programmable Thermostat:
With Dual Zone space heating systems, the ON/Off programmable thermostat for Zone 2 must be attached to the ZONE 2 ON/OFF THERMOSTAT connection. If a non-programmable room thermostat is used, you must make sure that the applicable heating schedule is set at the Logic Air controller. Refer to *Figure 38 on page 43* and Section *5.5 Activation of System - Quick Setup. If using an on/off stat the requirements in Section 1.3.4 must be met.*

3. Link Diagnostics:

Consult the Link Diagnostics manual for further information.

4. Halo Air Interface:

Consult the Halo Air manual for further information.

5. Flow Thermistor - Primary Heating Circuit:

If using a Logic Air Non-Pre-Plumbed Cylinder, the flow 28 mm clip-on thermistor will need to be installed on a section of copper pipework and secured to avoid it being disturbed.

It is recommended to install insulation to reduce ambient temperature influence.

The Flow Thermistor is to be placed on the primary flow pipe (from the Heat Pump) before the circuit separates into the DHW / CH. This is then to be connected to the control box via the ‘Flow Thermistor’ connection, use the cables provided which can be extended if necessary.

6. Return Thermistor - Primary Heating Circuit:

If using a Logic Air Non-Pre-Plumbed Cylinder, the return 28 mm clip-on thermistor will need to be installed on a section of copper pipework and secured to avoid it being disturbed.

It is recommended to install insulation to reduce ambient temperature influence.

The Return Thermistor is to be placed on the primary return pipe (from the Heat Pump) after the circuit combines from the DHW / CH. This is then to be connected to the control box via the ‘Return Thermistor’ connection.

7. Header Thermistor

Only used in Cascade modes. Refer to Logic Air Cascade Instructions and Section 4.5 Hybrid Sections respectively.

8. Domestic Hot Water Thermistor

When using a Logic Air Pre-Plumbed cylinder, the Domestic Hot Water Thermistor will be pre-installed as part of the package. If using a Logic Air Non-Pre-Plumbed Cylinder, the DHW thermistor will need to be inserted into the sensor pocket and secured to avoid it being disturbed.

If using a third party DHW cylinder, refer to the manufacturer’s installation guidelines for thermistor installation requirements, use the cables provided which can be extended if necessary. It is recomended to install insulation to reduce ambient temperature influence.

9. Mains supply - Immersion Heater or Hybrid

Input connection for a 230V ac mains supply, as per Section *4.3.6* for a 3 kW immersion heater.

⚠ CAUTION: This supply must be protected by a dedicated circuit breaker (16 A - C curve)

OR

If using a boiler backup application, this input connection is used for a switched live "call for heat" circuit (refer to the boiler installation manual for wiring details).

10. Immersion Heater or Backup Boiler

Output connection for a 230V ac mains supply, as per Section *4.3.6* for a 3 kW immersion heater.

OR

If using a boiler backup application, this output connection is used for a switched live "call for heat" circuit (refer to the boiler installation manual for wiring details).

11. Faults

If it is required that an external device (such as a fire alarm) should be able to shut down the heat pump, then a 230Vac signal from the external device is wired into this connection.

⚠ CAUTION: The line voltage is 240V.

12. Tariffs

If Tariff Control is required, it is to be wired into the ‘Tariffs (EX2)’ connection.

Faults (EX1): disables the heat pump if an external device indicates a fault (eg fire alarm)

Tariffs (EX2): puts the heat pump into reduce mode if an external device indicates electricity costs are high

Shedding (EX3): disables the heat pump if an external device indicates electricity costs are high.

⚠ CAUTION: The line voltage is 240V.

13. Logic Air Heat Pump Connections

Connections for both the 230V Mains Power Supply and the Communication between the Logic Air Monobloc Heat Pump and the Logic Air Control Box.

14. Overheat Thermostat - DHW Cylinder

When using a Logic Air Pre-Plumbed cylinder, the DHW Overheat Thermostat will be pre-installed as part of the package. If using a Logic Air Non-Pre-Plumbed Cylinder, the DHW Overheat Thermostat will need to be installed in the sensor pocket (Refer to Section *2.3* for sensor location) and secured to avoid it being disturbed.

If using a third party DHW cylinder, refer to the manufacturer’s installation guidelines for thermistor installation requirements.

⚠ CAUTION: The line voltage is 240V.

15. 3-Way Valve

When using a Logic Air Pre-Plumbed cylinder, the 3-way valve will be pre-installed as part of the package. If using a Logic Air Non-Pre-Plumbed Cylinder, the 3-way valve will need to be installed and connected to the control box via the '3-Way Valve' connection and must spring return to the CH position.

⚠ CAUTION: The line voltage is 240V.

cont'd.....

16. CH 1 Pump or Valve

The pump for either the single space heating circuit or space heating Zone 1 is to be wired into the 'CH1 Pump or Valve' connection.

⚠ **CAUTION: The line voltage is 240V.**

17. CH 2 Pump or Valve (If applicable)

For Dual Zone space heating systems, the second zone pump/valve is to be wired into the 'CH2 Pump or Valve' connection.

⚠ **CAUTION: The line voltage is 240V.**

4.3.8 Electrical Safety Test

⚠ **WARNING: As a minimum, the below electrical safety tests should be performed. Failure to do so, may result in damage to the product and/or personal injury.**

Upon completion of the electrical connections, electrical safety tests are to be done to verify the integrity of the circuit. These tests are to be done by a competent electrician in accordance with IET guidelines:

- Earth Continuity.
- Polarity.
- Resistance to Earth.
- Short Circuit.

4.4 INSTALLATION OF SYSTEM

⚠ **CAUTION: The installation manuals and guides of all individual system components must be obeyed to make sure of correct operation and optimised life expectancy.**

The system is to be installed in accordance with the standards and legislation outlined in Section *1.4*, and the requirements of section *3.1*.

Pipework is to be kept as simple as is practicable. Minimum bends are to be used and swept bends are preferred to increase efficiency and lifespan of system.

Where possible solder joints are to be made with temperature sensitive components disconnected.

Upon completion, the pipework should be cleaned in accordance with BSEN7593:2019 as specified in Section *5.2.1.*

⚠ **WARNING: Failure to appropriately protect against system expansion will lead to catastrophic failure of the system circuit, major property damage, and serious harm to dwelling inhabitants. It must be sized in accordance with BS EN 12828.**

Make sure an expansion vessel is installed in the primary circuit return pipe. Refer to Appendix 1 for further details. The expansion vessel must be pre-charged to the correct pre-charge setting before heating the circuit is filled. The plumbed water connection should be upward facing to aid de-aeration.

⚠ **CAUTION: System water is to be cleaned, treated, tested, and maintained in accordance with BS 7593:2019 - Code of practice for the preparation, commissioning, and maintenance of domestic central heating.**

All safety relief valves (including antifreeze) are to be mounted in an orientation that avoids sediment build up on the sealing face.

Air vents should be placed at every high point within the circuit.

4.5 HYBRID SYSTEMS

The system must be installed in accordance with the hybrid system layout schematics supplied in the schematics manual.

ⓘ **IMPORTANT: If a heat only/system boiler or heat pump is used for DHW, it must be made sure that the DHW Thermistor is installed in the system. If a combination boiler is used, this is not required.**

The boiler flow temperature must be set dependant on the presence of a buffer cylinder in the primary circuit.

In systems with a buffer vessel; the boiler flow temperature must be set to a maximum of 50°C and it must be made sure that there is an automatic legionella program that satisfies legionella protection once a week, that is set on an independent time switch to enable immersion control and/or DHW backup heating.

In hybrid systems with a system/heat only boiler and without a buffer vessel; the boiler flow temperature can be set to a maximum of 65°C to satisfy legionella.

In combi systems the flow temperature is to be set to the flow temperature of the heat pump.

When the boiler is providing legionella protection, the flow temperature must be set to be able to achieve the legionella protection setpoint.

The boiler pump must be positioned on the return line or in the case of a heat only boiler, an additional pump must be installed on the boiler return.

4.5.1 Electrical Installation

The boiler power supply should be taken from the Logic Air control box supply shown in Section *4.3.5*, and Section *4.3.6*, and described in Section *4.3.7.1*.

If required, a DHW Thermistor must be wired in the terminal shown in Section *4.3.5* and described in Section *4.3.7.1*.

4.5.2 Controller Setup

During the quick setup, the controller must be set as demonstrated in Section *5.5*. Parameters must be set as a Hybrid Combi or Hybrid Heat System shown in *Table 11*. Legionella must be set accordingly with the chosen system schematic in the schematics manual.

‘5895 Backup Heater’ must be set to either Hybrid Combi or Hybrid Heat/System depending on the type of boiler used. This will determine which source is used for Antifreeze Protection and Legionella functions.

‘2910 Bivalent Point, Boiler Off’ and ‘3700 Bivalent Point, Boiler Off’ must both be set to the bivalent temperature calculated for the property. This can be set through the installer menu, by selecting ‘Configuration’ and then ‘Complete Parameter List’.

INSTALLATION

Table 11 Control Box Parameters

Function		Controller Parameter			Physical Inatallation	
Backup Boiler	**Heat Pump**	**5706 Backup Heater**	**2910 Bivalent Point, Boiler Off**	**3700 Bivalent Point, Boiler Off**	**Header Thermistor**	**DHW Thermistor**
Combination Boiler Providing Heating & Hot Water	Heating Only	Hybrid Combi	Bivalent*	Bivalent*	No	No
System/Heat Only Boiler providing Heat Only	Heating Only	Hybrid Heat/ System	Bivalent*	Bivalent*	No	No
System/Heat Only Boiler providing Heat Only	Heating & Hot Water	Hybrid Heat/ System	Bivalent*	Bivalent*	No	Yes
System/Heat Only Boiler providing Heating & Hot Water	Heating & Hot Water	Hybrid Heat/ System	Bivalent*	Bivalent*	No	Yes

* Set to the bivalent temperature based on heat loss calculations for the property.

** Controller is built into the Logic Air Control Box.

5.1 PRE-COMMISSIONING CHECKLIST

⚠ WARNING: It must be made sure that is completed prior to any further action. Further actions are not permitted, and the safety of the system is not verified unless each check has been done and positively confirmed.

Table 12 Pre-Commissioning Checklist

Does the circuit comply with the appropriate building regulations, and legislation?	
Does the circuit have the necessary safety devices installed?	
Do electrical components of the circuit and surrounding areas have their electrical supply switched off or are reasonably protected from potential water leaks/sprays?	
Are all drainage valves (and any other valve that open the circuit) closed?	
Are automatic-air-vent dust caps open?	
Have adequate antifreeze measures been installed in the system (not including dosing)?	

5.2 COMMISSIONING OF HYDRONIC CIRCUIT

5.2.1 Flushing out the Hydronic Circuit

⚠ CAUTION: Pipework is to be cleaned in accordance with BSEN7593:2019 to remove any particles that may negatively affect the performance of any of the components. If the system is not rinsed, the system efficiency will be negatively affected, and it will negatively affect the life expectancy of the system components. Requirements stipulated in BS 7593:2019 should be followed when purging and treating the system water circuit.

ⓘ IMPORTANT: The application of any treatment to this product that is not outlined in this document may render the guarantee invalid.

It is recommended to use any of the following solutions for cleaning the system. Please follow the instructions and guidance supplied with the solution.

- Fernox F3
- ADEY MC3 or MC5
- Sentinel X300 (New Systems)
- Sentinel X400 (Existing Systems)

COMMISSIONING

5.2.2 System Water Treatment

5.2.2.1 Water Quality

ⓘ IMPORTANT: Requirements stipulated in BS 7593:2019 should be followed when purging and treating the system water circuit.

The following steps should be taken to check any closed loop circuit. A heating circuit water quality test kit will be required (instructions on test kit to be followed over the following for taking a sample).

Make sure that the heating system has been circulating and operating at temperature for a minimum of 15min.

1. Use a drainage point (preferably low in the system) to take a water sample sufficient for test.
2. The sample will then need to be checked for the following (instructions on test kit to be followed):
   - pH Level.
   - Water Hardness.
   - Turbidity.
   - Propylene Glycol Concentration (if applicable)

Record results on the Benchmark records at the rear of this book.

INFORMATION: Ideal Heating accepts no liability for the compatibility, effectiveness, and suitability of any inhibitors used in part or in whole of the heating system. It is the responsibility of the applicator of the inhibitor to assess the system and its components for compatibility with the inhibitor.

Ideal Heating recommend dosing the system with a suitable Inhibitor as a minimum. If propylene glycol is used for Frost Protection a combined Propylene Glycol, Biocide and Inhibitor MUST be used.

5.2.2.2 Dosing Method

⚠ CAUTION: Prior to dosing, check the compatibility of any chemicals or solutions to be added with the system components and materials to prevent damage or reduced lifespan.

The system is to be dosed following the guidance stipulated in BS 7593:2019 and the instructions provided by the inhibitor manufacturer.

ⓘ IMPORTANT: When dosing the system with any product, the use of fill and flush valves in conjunction with a fill and flush station is recommended to make sure the concentration and mixing is thorough and avoid the potential for hydrostatic locking of the system.

5.2.2.3 Antifreeze Valves

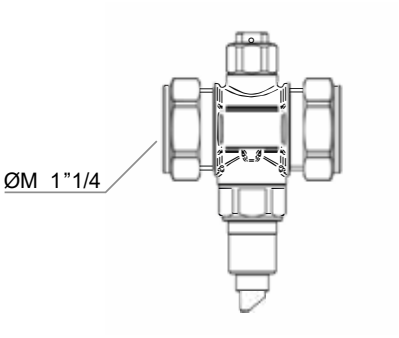

Figure 39. Typical Antifreeze Valve

Installation

Refer to Antifreeze valve manufacturers installation instructions. Below is general guidance on the installation requirements

To achieve correct flow through the device, the valve must be installed in the vertical position as depicted. It must be free from obstructions to enable servicing.

The antifreeze valves must be installed outside, in the coldest part of the system that is at risk of freezing.

We recommend installing the antifreeze valves on both pipes (flow and return). Refer to *Figure 40.*

They must not be placed close to heat sources which could interfere with proper function.

Ice may form and build up below. Follow manufacturers instructions when installing any anti-freeze valves.

When installed outdoors, the anti-freeze valve must be protected from rain, snow and direct sunlight.

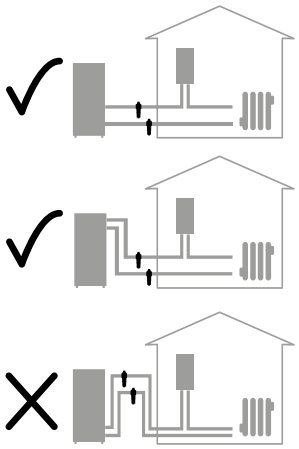

Figure 40. Antifreeze Installation Recommendations

5.2.2.4 Glycol Antifreeze Treatment

Ideal Heating recommend dosing the system with a suitable Inhibitor as a minimum. If propylene glycol is used for Frost Protection a combined Propylene Glycol, Biocide and Inhibitor MUST be used in accordance with BS 7593:2019.

ⓘ **IMPORTANT: When dosing the system with any product, the use of fill and flush valves in conjunction with a fill and flush station is recommended to make sure the concentration and mixing is thorough and avoid the potential for hydrostatic locking of the system.**

⚠ **CAUTION: The Tables below are for guidance only, consultant the glycol providers instruction for exact dosage and recommendations for use.**

The values in *Table 13* illustrates the freezing point of the water when dosed with propylene glycol mixtures.

Table 13 Glycol Concentration vs Expected Min. Outdoor Temp.

Freezing Point						
Propylene Glycol Solution (%)	0	10	20	30	40	50
Temperature (°C)	0	-3	-8	-14	-22	-34

The below values in table Table 12 illustrates the heating capacity reduction when dosed with propylene glycol and whilst maintaining nominal flow rates.

Table 14 Glycol Concentration vs Performance

4 kW System	**Water**	**% Propylene glycol volume in water**								
	100%	10	15	20	25	30	35	40	45	50
Heating Capacity kW	4.0	3.92	3.89	3.84	3.80	3.74	3.68	3.58	3.52	3.40
Reduction Fac	1.0	0.980	0.973	0.960	0.950	0.935	0.919	0.895	0.880	0.850
5 kW System	**Water**	**% Propylene glycol volume in water**								
	100%	10	15	20	25	30	35	40	45	50
Heating Capacity kW	5.0	4.90	4.86	4.80	4.75	4.68	4.60	4.48	4.40	4.25
Reduction Factor	1.0	0.980	0.973	0.960	0.950	0.935	0.919	0.895	0.880	0.850
8 kW System	**Water**	**% Propylene glycol volume in water**								
	100%	10	15	20	25	30	35	40	45	50
Heating Capacity kW	8.0	7.84	7.78	7.68	7.60	7.48	7.35	7.16	7.04	6.80
Reduction Factor	1.0	0.980	0.973	0.960	0.950	0.935	0.919	0.895	0.880	0.850
10 kW System	**Water**	**% Propylene glycol volume in water**								
	100%	10	15	20	25	30	35	40	45	50
Heating Capacity kW	10.0	9.80	9.11	9.00	8.91	8.77	8.62	8.39	8.25	7.97
Reduction Factor	1.0	0.980	0.911	0.900	0.891	0.877	0.862	0.839	0.825	0.797

5.3 FILLING THE SYSTEM

⚠ WARNING: During charging operations, it must be made sure that the electrical components of the circuit and surrounding area have their electrical supply switched off or protected from potential water leaks/sprays. Failure to comply with this requirement increases the risk of electric shock, damage to the products.

Make sure that all circuits connections have been made and drainage valves are closed before charging the system. A system circulator is not to be operated whilst initially charging the system.

Refer to *5.2.2.2* for dosing requirements.

Filling the System

The primary heating circuit is charged using the following method:

1. Review the circuit and confirm that installation has been completed.
2. Open automatic air vent dust cap. Refer to *Figure 41*.
3. The filing loop is to be gradually opened whilst looking at the pressure gauge.
4. Fill the system to between 1 - 1.5 Bar.

⚠ CAUTION: Care should be taken when filling the system. If pressure is difficult to achieve, or if a pressure drop is observed after the pressure is settled, circuit components and routes should be reviewed and checked for water leaks.

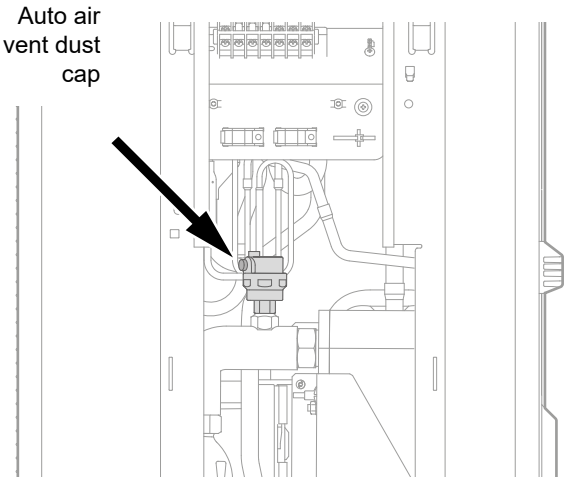

Figure 41. Auto Air Vent Dust Cap

5.4 SYSTEM AIR VENTING

⚠ WARNING: The outdoor unit is supplied with the automatic air vent closed. To allow for proper air venting the dust cap must be opened as shown in .

1. Charge the circuit with water through the filling valve, making sure that the system air vents have been purged.
2. Once all the air is purged, charge the circuit pressure to 1 – 1.5 bar. Refer to Tables 5, 6, 7, & 8.
3. Periodically operate the system circulator and repeat steps 1 – 2 until all the air is removed from the system.
4. Make sure that the pressure is set correctly and that any auto air vents are left open upon completion.

Air Lock

All automatic air vents should be opened, and the system should be filled with water until the pressure reaches 1 - 1.5 bar. Circulator pumps should then be activated and the system checked for flow to determine whether any airlocks are present.

If airlocks are detected, a pipe should be connected to bleed valve of the buffer tank, and routed to a suitable drainage location. Open the bleed valve to allow trapped air to escape from the top of the buffer tank. Then reopen the filling loop and fill system until a flow of water is observed at the drain through bleed valve. This indicates that air has been successfully expelled from the system. The circulator pumps should be activated again to verify that flow is now present.

5.5 ACTIVATION OF SYSTEM - QUICK SETUP

⚠ WARNING: Prior to activating the control box, make sure that all requirements and checks from sections *5.1 and 5.3* have been completed. Electrical circuits require verification of safety to reduce risk of electric shock or damage to the system.

⚠ WARNING: The Heat Pump must have the power active for a minimum of 6 hours prior to activation of the heating function to protect the compressor.

ⓘ IMPORTANT: To use the control screen the dial can be rotated clockwise to move selection downwards, anti-clockwise to move selection upwards, and pressed to select. When options are selected, the dial can be turned to cycle through the setting options. To exit menus or return to previous screens, a selectable option will be displayed at the bottom of the screen.

ⓘ IMPORTANT: When the outdoor temperature is below 17°C there will be a delay in the activation of the heat pump due to the cold start function (see section 2.7.6 for further details).

When the control box is first activated, the screen shown below will display.

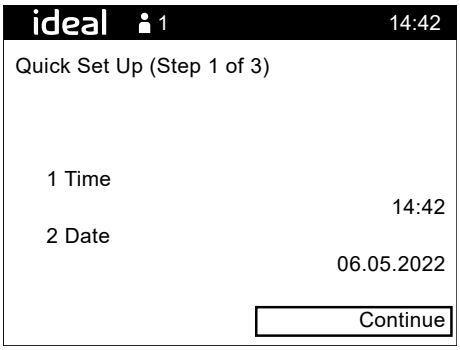

The '1 Time' and '2 Date' can be set on this screen. When set, select 'Continue' to move onto the next screen.

ⓘ IMPORTANT: The date and time must be set correctly so that a heating schedule can be set up. Some setup functions may not be possible to trial run if this is not set correctly.

The following screen will be shown:

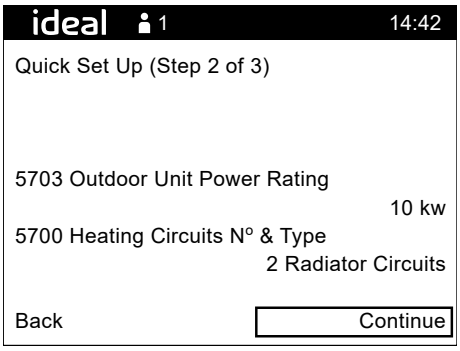

Set the power rating to 4, 5, 8 or 10 kW as applicable. The power rating displayed on the data plate of the Heat Pump is then in putted into '5703 Heat Pump Power Rating'.

'5700 Heating Circuits No & Type' must then be set to the type of system from the following options:

- 1 Radiator Circuit
- 1 Underfloor Circuit
- 2 Radiator Circuits
- 1 Rad & 1 Underfloor
- 1 Underfloor & 1 Rad
- 2 Underfloor Circuits
- Heat Pump Slave

When set, select 'Continue' to move onto the next screen.

The following screen will be shown.

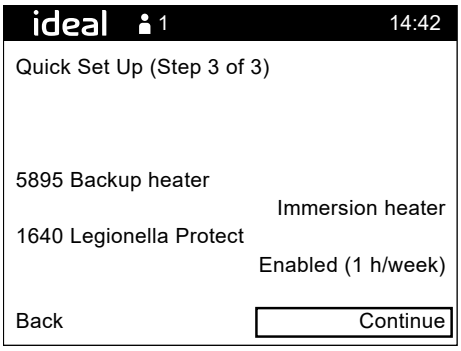

'5895 Backup heater' is to be set to the appropriate option from the following:

- DHW Immersion Heater
- Heat Only
- Hybrid Combi
- Hybrid Heat/System

Legionella Protection is enabled as default and should only be disabled with a heat only system configuration i.e. no DHW cylinder.

When set, select 'Continue' to move onto the next screen.

A final screen is then shown to confirm that the settings have been correctly set. Once confirmed, select 'Continue' to complete quick set up and move onto the home screen.

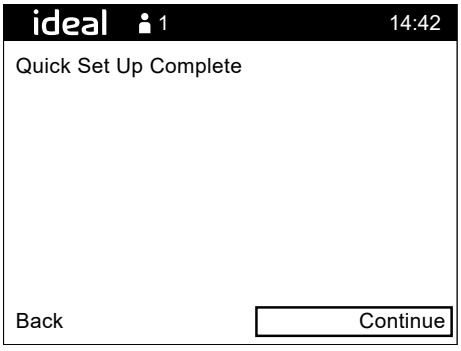

Select continue again once the system has configured then the home screen will be shown.

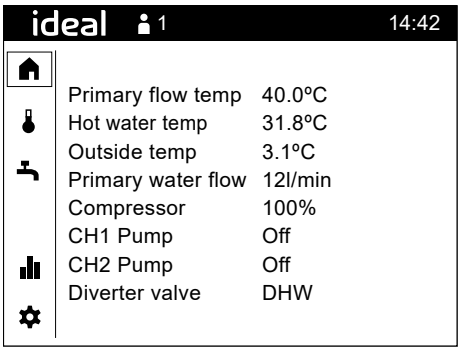

COMMISSIONING

5.6 DEFAULT SYSTEM PARAMETERS

Table 15 Default System Parameters

Parameter Group	Parameter Number	Parameter Description	Heat Pump Default	Halo Default
Time Of Day And Date	1	Time	n/a	n/a
		Date	n/a	n/a
User Interface	20	Language	English	n/a
Heating Zone 1 Schedule	501 - 506	Time Schedule	06:00 to 08:00 & 16:00 to 22:00 & 00:00 to 00:00	06:00 to 08:00 & 16:00 to 22:00 & 00:00 to 00:00
	516	Reset to Default Schedule	No	n/a
Heating Zone 2 Schedule	521 - 526	Time Schedule	06:00 to 08:00 & 16:00 to 22:00 & 00:00 to 00:00	06:00 to 08:00 & 16:00 to 22:00 & 00:00 to 00:00
	536	Reset to Default Schedule	No	n/a
Time Schedule 4/ DHW	561 - 566	Time Schedule	00:00 to 06:00 & 12:00 to 16:00 & 00:00 to 00:00	00:00 to 06:00 & 12:00 to 16:00 & 00:00 to 00:00
	576	Reset to Default Schedule	No	n/a
Heating Zone 1	700	Heating Mode	Schedule	Auto
	710	Comfort temp setpoint	21.0° C	21.0° C
	712	Setback setpoint	18.0° C	18.0° C
	720	Heating curve	1.40 (rads) or 0.9 (underfloor)	n/a
	721	Heating curve offset	0° C	n/a
	730	Summer/winter heating limit	21.0° C	21.0° C
	740	Flow temp setpoint min	17.0° C	n/a
	741	Flow temp setpoint max	55° C	n/a
	750	Room influence	20%	n/a
	790	Optimum start control max	180min	03:00
	791	Optimum stop control max	0min	00:00
	850	Floor curing function	Off	n/a
	851	Floor curing setup manually	15° C	n/a
	856	Floor curing day current	0	n/a
	857	Floor curing days completed	0	n/a
Heating Zone 2	1000	Heating mode	Schedule	Auto
	1010	Comfort temp setpoint	21.0° C	21.0° C
	1012	Setback setpoint	18.0° C	18.0° C
	1020	Heating curve	set during Quick start	n/a
	1021	Heating curve offset	0° C	n/a
	1030	Summer/winter heating limit	21.0° C	n/a
	1040	Flow temp setpoint min	17° C	n/a
	1041	Flow temp setpoint max	55° C	n/a
	1050	Room influence	20%	n/a
	1090	Optimum start control max	180min	03:00
	1091	Optimum stop control max	0min	00:00
	1150	Floor curing function	Off	n/a
	1151	Floor curing setup manually	15° C	n/a
	1156	Floor curing day current	0	n/a
	1157	Floor curing days completed	0	n/a
Domestic Hot Water	1600	DHW Mode	On	n/a
	1610	DHW Target Temperature	50° C	n/a
	1612	Setback setpoint	10° C	n/a
	1620	Release	T'sched 4/DHW or low-tarriff	n/a
	1640	Legionella Protect	set during Quick start	n/a
	1642	Legionella funct day	Monday	n/a
	1644	Legionella funct time	11:00	n/a
	1645	Legionella funct setpoint	65° C	n/a
Heat Pump	2776	DHW pri' pump min speed	70%	n/a
	2777	Pump speed max with DHW	70%	n/a
	2790	Primary pump modulation	None	n/a
	2792	Pump speed min	70%	n/a
	2793	Pump speed max	100%	n/a
	2803	Primary Pump Overrun	240s	n/a
	2805	Req temp diff condenser	5.0° C	n/a
	2843	Compressor off time min	8min	n/a
	2907	Silent power mode max	Unused	n/a
	2910	Bivalent point, boiler off	Unused	n/a
	3026	Silent mode on	00:00	n/a
	3027	Silent mode off	00:00	n/a

Cont'd.....

Supplementary Source	3692	DHW Heat Source	set during Quick start	n/a
	3694	DHW Bivalent point	Ignore	n/a
	3700	Bivalent point, boiler on	2.0° C	n/a
	3701	Bivalent point, boiler off	Unused	n/a
	3705	Boiler overrun time	0min	n/a
DHW storage tank	5024	DHW Hysteresis	7° C	n/a
Configuation	5700	Heating Zone No & Type	set during Quick start	n/a
	5703	Outdoor Unit Power Rating	set during Quick start	n/a
	5706	Backup heater	set during Quick start	n/a
	5710	Heating Zone 1	On	n/a
	5715	Heating Zone 2	set during Quick start	n/a
	5726	DHW Cylinder	set during Quick start	n/a
	5736	DHW reset	Off	n/a
	5806	Type el imm heater flow	1-stage	n/a
	5980	Function input EX1	Error/alarm message	n/a
	5981	Cont type input EX1	NO	n/a
	5982	Function input EX2	Low-tarriff E5	n/a
	5983	Cont type input EX2	NO	n/a
	5984	Function input EX3	Electrical utility lock E6	n/a
	5985	Cont type input EX3	NO	n/a
	6120	Frost protection plant	On	n/a
	6201	Reset sensors	No	n/a
Cascade Bus	6600	Device address	1	n/a
	6601	Segment address	0	n/a
Fault	6800 to 6819	History 1 to 10, Fault Code 1 to 10	n/a	n/a
Service / Special Operation	7070	Service Interval	Unused	n/a
	7141	Emergency Mode	Off	n/a
	7150	Simulate outdoor temp	Unused	n/a
	7202	Commissioning heat pump	Off	n/a
Relay Test	7700	Relay test	No test	n/a
State	8006	State heat pump	n/a	n/a
Diagnostics Heat Generation	8400	Compressor 1	n/a	n/a
	8406	Primary Pump	n/a	n/a
	8407	Primary Pump Speed	n/a	n/a
	8410	Return temp HP	n/a	n/a
	8411	Setpoint HP	n/a	n/a
	8412	Flow temp HP	n/a	n/a
	8413	Compressor modulation	n/a	n/a
	8415	Hot-gas temp 1	n/a	n/a
	8425	Temp diff condensor	n/a	n/a
	8433	Heat exchanger temperature	n/a	n/a
	8450	Hours run compressor	n/a	n/a
	8458	State smart grid	n/a	n/a
	8460	Primary water flow	n/a	n/a
	84936	Outdoor water flow	n/a	n/a
Diagnostic Consumers	8700	Outdoor temp	n/a	n/a
	8703	Outdoor temp weekly avrg.	n/a	n/a
	8704	Outdoor temp hourly avrg.	n/a	n/a
	8740	Room temp 1	n/a	n/a
	8744	Flow temp setpoint 1	n/a	n/a
	8770	Room temp 2	n/a	n/a
	8774	Flow temp setpoint 2	n/a	n/a
	8820	Diverter valve	n/a	n/a
	8821	Immersion heater	n/a	n/a
	8830	DHW temp	n/a	n/a
	8840	Hours run DHW mode	n/a	n/a
	8842	Hrs run immersion DHW	n/a	n/a

5.7 HEAT PUMP CONTROL SETUP

The Heat Pump controls are located on the front of the control box. This is the centralised control for the full heating system.

ⓘ **IMPORTANT: To use the control screen the dial can be rotated clockwise to move selection downwards, anti-clockwise to move selection upwards, and pressed to select. When options are selected, the dial can be turned to cycle through the setting options. To exit menus or return to previous screens, a selectable option will be displayed at the bottom of the screen.**

- Rotate the dial clockwise for downwards selection
- Rotate the dial anti-clockwise for upwards selection
- Press the dial to make selection

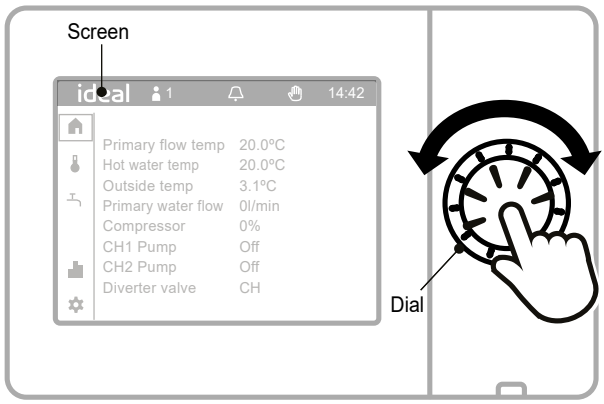

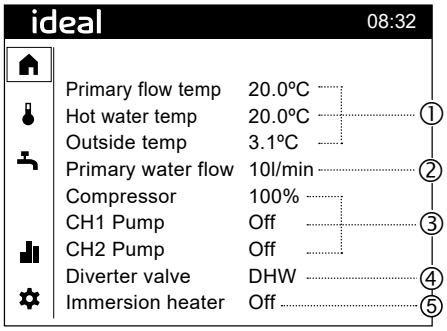

STATUS SYMBOLS	
	Symbol 'Alarm' indicates a plant error.
	Symbol 'Maintenance/Special operations' indicates the presence of a maintenance message or special operation feedback.
	Symbol 'Event' indicates an event message from the plant.
	'Hand' symbol The 'Hand' symbol is displayed if the plant/zone switch setting is changed by making an adjustment on the topic pages. Adjustments made on the topic pages can be reset at the plant/zone switch.
12:00	The device clock is synchronized with the clock from the connected controller.
	Symbol 'User' and the number to the right (access level 1 to 3) indicate which user level is currently active. • 1: Commissioning engineer • 2: Heating engineer • 3: OEM
	Symbol 'Producer' indicates the main producer (e.g. oil/gas boiler, heat pump) that is currently switched on.

NAVIGATION SYMBOLS	
	Default Screen
	Space Heating
	Domestic Hot Water
	System Information
	Settings Menu
	Return to Previous Screen
	Test Function
	Installer Functions
OPERATING MODES	
①	Operating Temperatures
②	Water Flow from Heat Pump to Indoor Unit
③	Heat Pump Output
④	Hot Water and Central Heating System Control Actuator Status
5 ◯	Details on Immersion Heater - On/Off

ⓘ **IMPORTANT: It is recommended that on/off room thermostats are not installed with this product as they may negatively affect system performance and provide no optimisation potential.**

If the Halo Air is not installed as the programmable room thermostat and an alternative Programmable Room Thermostat (PRT) is used the following basic functionality must be provided:

- **Setback Temperature with a maximum 3ºC below comfort temperature.**
- **Heating Schedule with a minimum 2.5-hour optimisation.**
- **The Logic Air Control must be set to permanent comfort mode.**
- **Maximum cycle rate of 1 per hour.**

5.7.1 Initial Heat Delivery

CREATING A CENTRAL HEATING DEMAND

If a halo is used consult the Halo instruction manual.

For an On/Off Room Stat increase the room temperature setpoint until the heating switches on

SWITCHING CENTRAL HEATING OFF

Switch central heating off using Halo or On/Off room stat

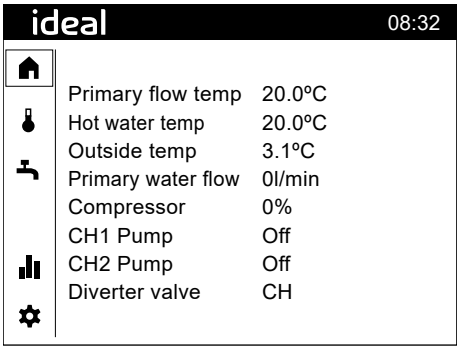

CREATING A HOT WATER DEMAND & CHANGING THE SETPOINT

Rotate the dial to highlight functions and change values, press the dial to select the function and confirm changes

Select the tap icon in the left hand column

The following screen will be shown:

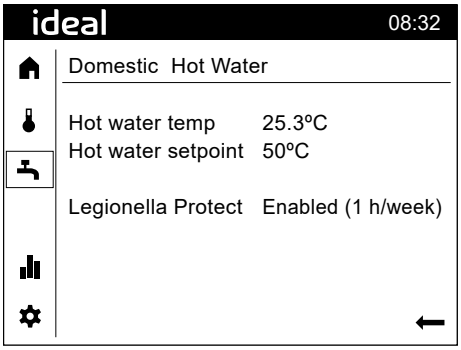

To change the setpoint, select the setpoint function and change the value to 57°C

Return to the home screen by selecting the back arrow and then the home symbol.

The display will change to the following:

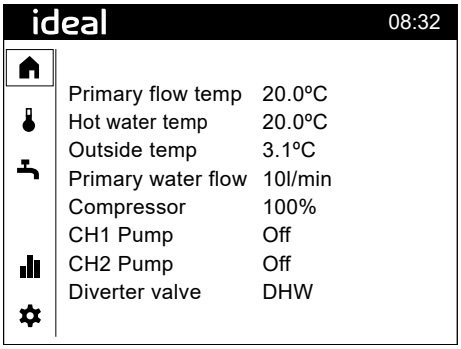

If you are installing a Halo Air alongside the Logic Air. Proceed to section 5.7.3. (Section 5.7.2 is for reference only).

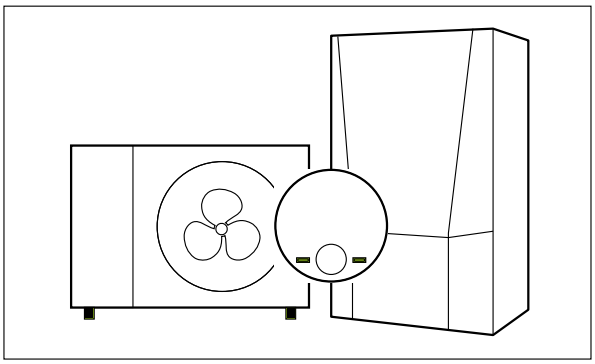

SCAN
for Halo Air Installation Guide

5.7.2 Menu Operation

SETTING THE CENTRAL HEATING TIME PROGRAM

On/Off non-programmable room stats only

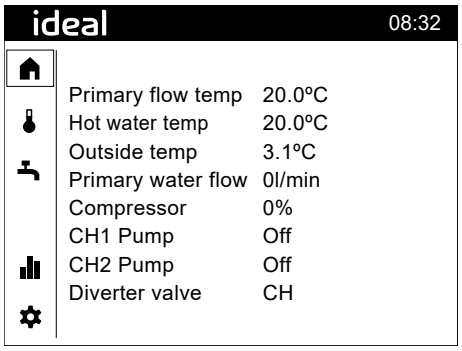

Starting from the Home Screen (see above), to set a central heating programme, rotate the dial until the thermometer icon in the left-hand schedule is highlighted and press the dial. The following schedule screen will be shown:-

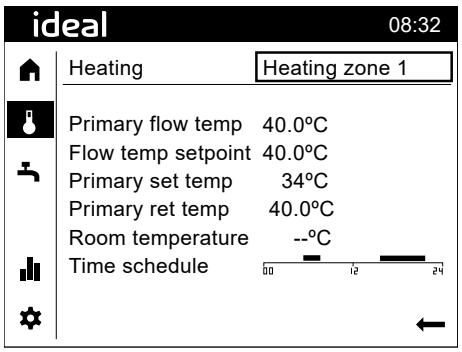

Press the dial and then rotate the dial until the desired central heating zone is shown then press the dial again, rotate the dial until the Time program is highlighted and then press the dial again. The following schedule screen will be shown:-

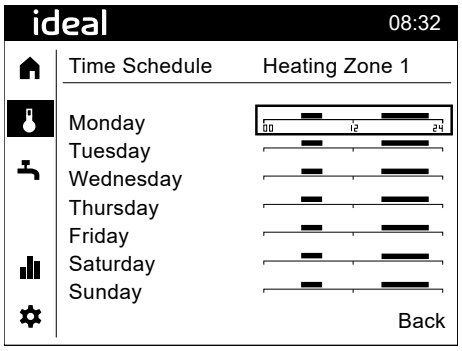

Rotate the dial until the desired day for setting is shown and then press the dial.

The following screen will be shown:

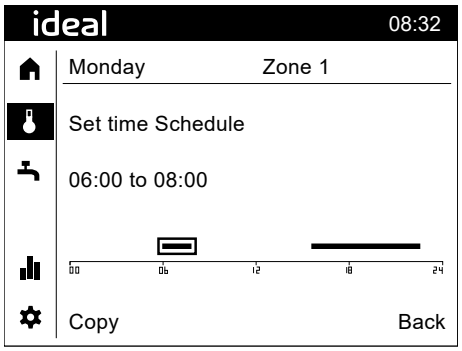

Move the highlighted area to the time you wish to change using the dial and press the dial, then rotate the dial to change the time and press the dial to save.

COMMISSIONING

SETTING TIME/DATE

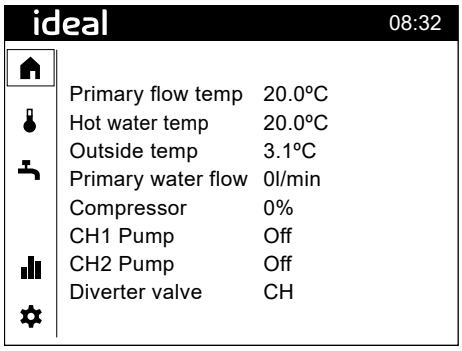

Starting from the Home Screen (see above), to set time/date, rotate the dial until the settings icon in the left-hand column is highlighted and select. The following screen will be shown:-

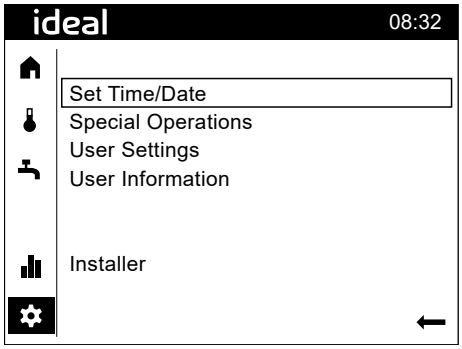

Rotate the dial until Set Time/Date is highlighted and then press the dial and the following screen will be shown:-

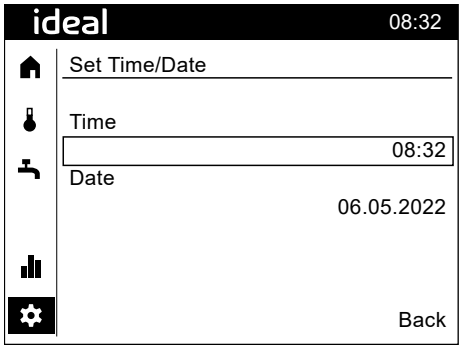

Rotate the dial until the Time is highlighted and press the dial then rotate the dial to change the time and press the dial to save. Rotate the dial until the Date is highlighted and press the dial then rotate the dial to change the date and press the dial to save.

SWITCHING THE DHW IMMERSION HEATER ON

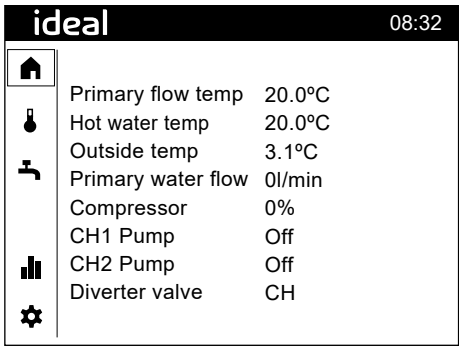

Starting from the Home Screen (see above), to switch the DHW immersion heater on, rotate the dial until the settings icon in the left-hand column is highlighted and press the dial. The following screen will be shown:-

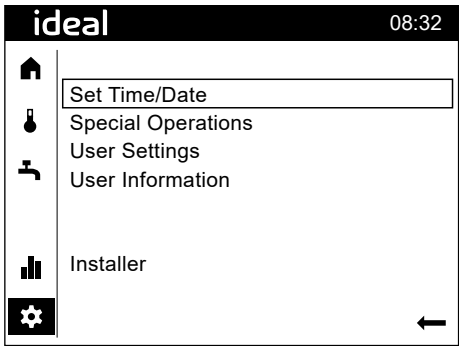

Rotate the dial until Special operations is highlighted and then press the dial and the following screen will be shown:-

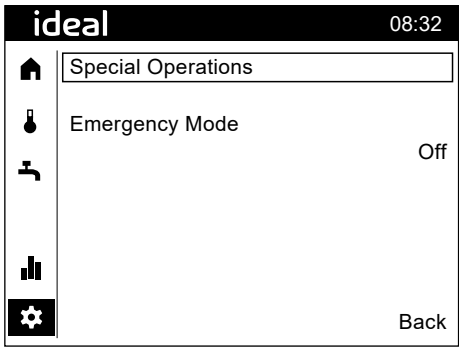

Rotate the dial until the Emergency Mode setting is highlighted and press the dial then turn the dial to change the setting and press the dial to save.

CHANGING THE COMFORT SETPOINT

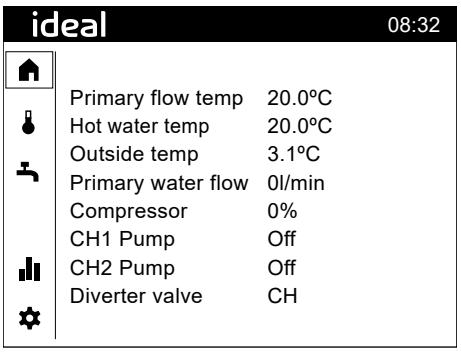

Starting from the Home Screen (see above), to change the Comfort setpoint, rotate the dial until the settings icon in the left-hand column is highlighted and press the dial. The following screen will be shown:-

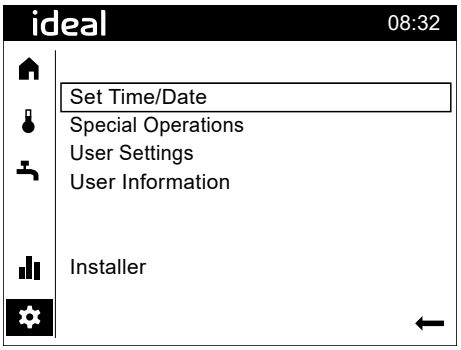

Rotate the dial until User settings is highlighted and then press the dial and the following screen will be shown:-

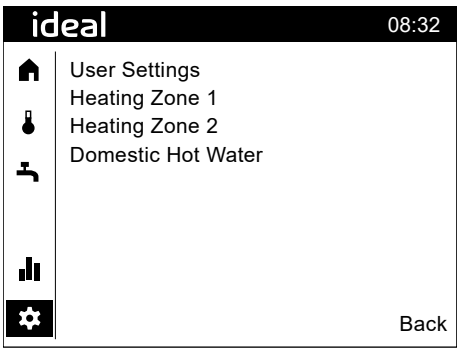

Rotate the dial until Heating Zone 1 is highlighted and press the dial. The following screen will be shown:-

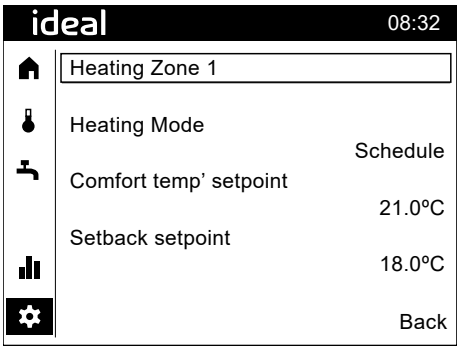

Press the dial and rotate the dial until the desired central heating zone is shown then press the dial. Rotate the dial until the temperature is highlighted and press the dial then rotate the dial to change the temperature and press the dial to save.

SETTING DHW TIME PROGRAM

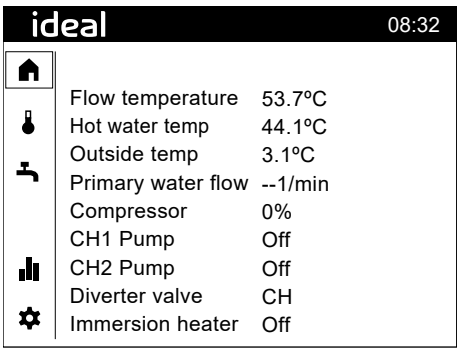

From the homescreen (see above) rotate the dial until the following screen is shown:-

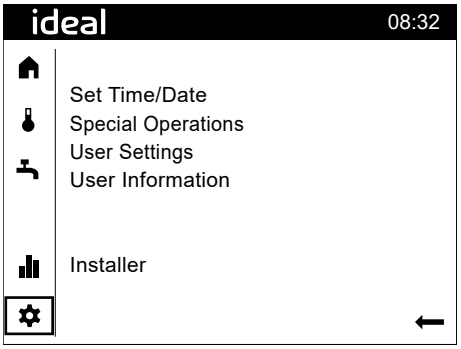

Press the dial then rotate the dial until “User Settings” is highlighted & press the dial so that the following screen is shown.:-

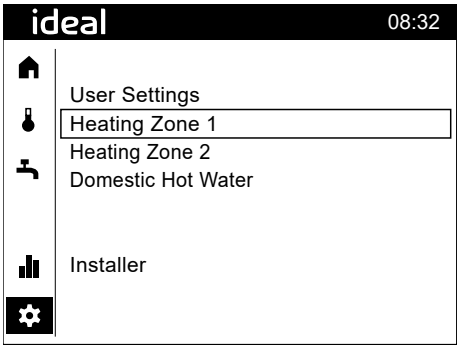

Rotate the dial until “Domestic Hot Water” is highlighted & press the dial so that the following screen is shown:-

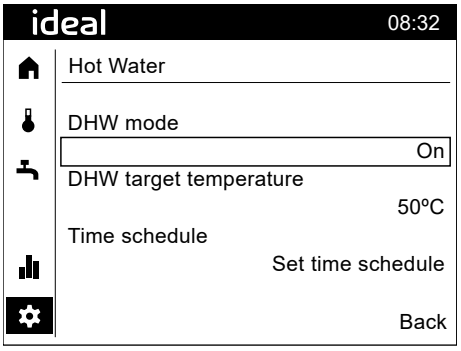

Rotate the dial until “Time schedule” is highlighted and then press the dial, with the following screen being shown.

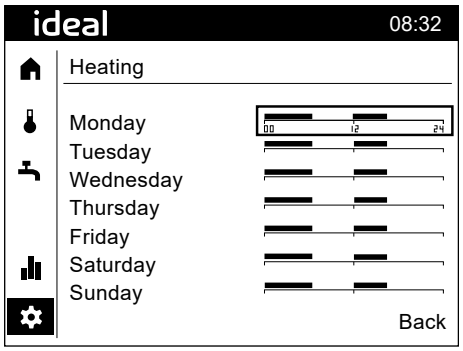

Rotate the dial until the day it is desired to change is highlighted and then press the dial, with the following screen being shown:-

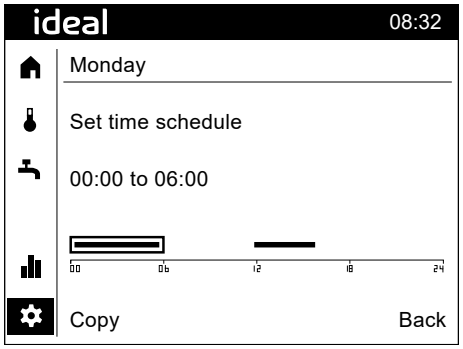

To change a time period press the dial and then rotate the dial. To move between time periods rotate the dial.

CHANGING ACCESS LEVEL FROM END USER TO INSTALLER

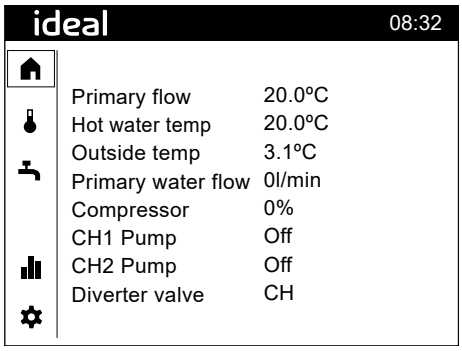

Starting from the Home Screen (see above), to change the Access Level from End User to Installer, rotate the dial until the settings icon in the left-hand column is highlighted and press the dial. The following screen will be shown:-

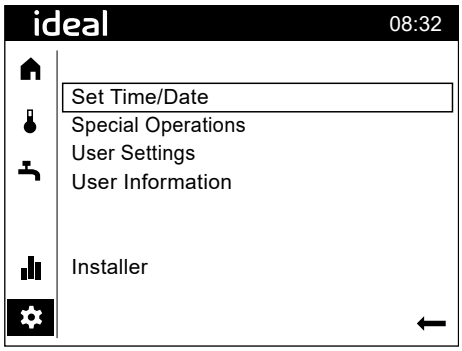

Rotate the dial until Installer is highlighted and then press the dial and the following screen will be shown:-

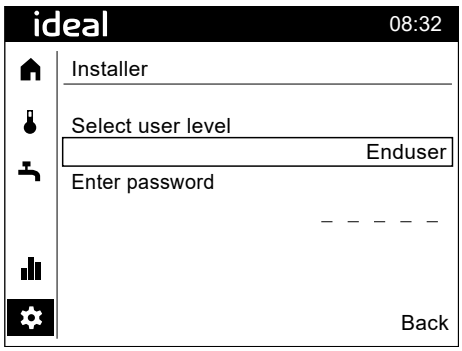

Press the dial and rotate the dial until Installer is shown then press the dial. Rotate the dial until the password line is highlighted and press the dial then rotate and press the dial in turn setting to 12345.

ⓘ **Installer Access will timeout after 15 minutes, if the screen is left idle and will result in reverting back to End User Access.**

RELAY TEST

Having changed the Access Level from End User to Installer, the following screen will be shown:-

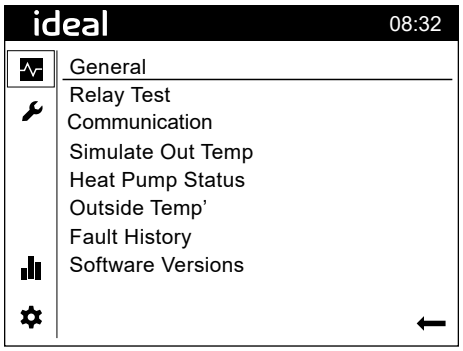

Press the dial and the following screen will be shown:-

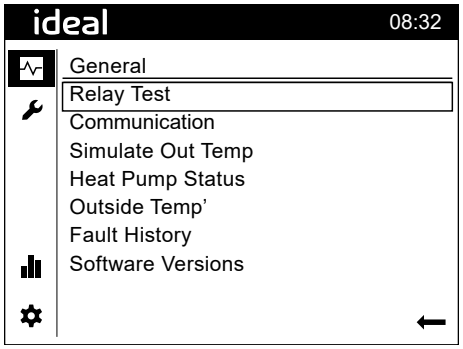

Press the dial and the following screen will be shown:-

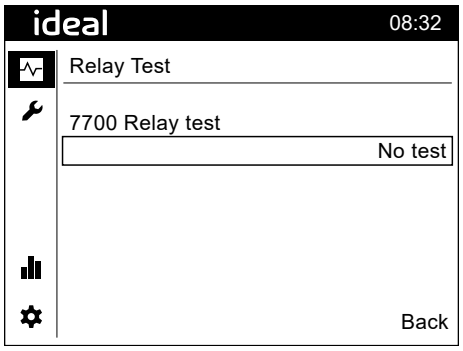

Press the dial and turn the dial until the desired relay is shown then press the dial to switch that relay.

ⓘ **A relay test once initiated, operates for a duration of 10 minutes only.**

SIMULATE OUTSIDE TEMPERATURE

Having changed the Access Level from End User to Installer, the following screen will be shown:-

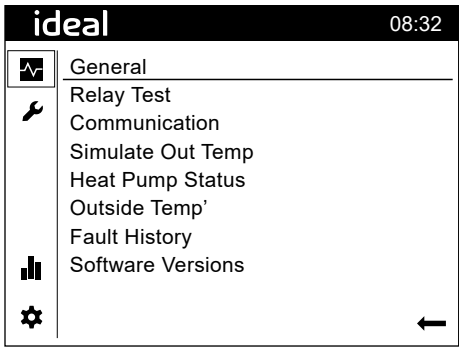

If you would like to simulate a different outside temperature to the actual outside temperature, press the dial and rotate the dial until the following screen is shown:-

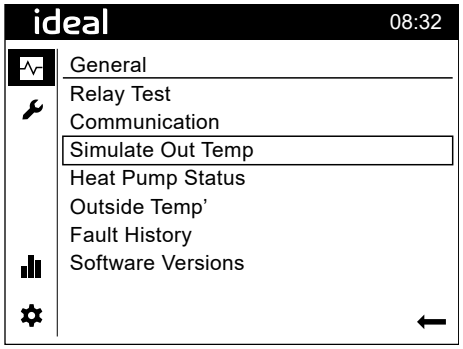

Press the dial and the following screen will be shown:-

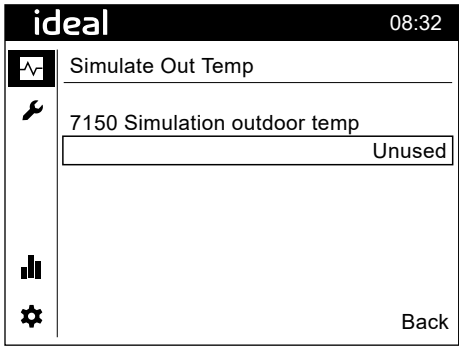

Press the dial and turn the dial to set the required outside temperature then press the dial again to implement.

HEAT PUMP STATUS

Having changed the Access Level from End User to Installer, the following screen will be shown:-

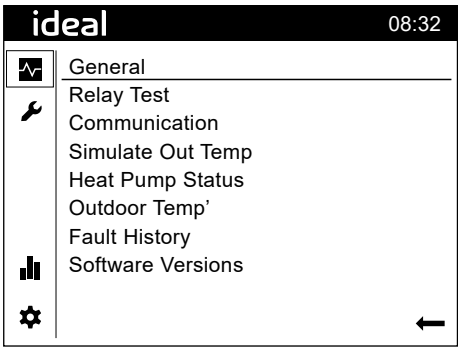

If you would like to see the Heat Pump Status, press the dial and rotate the dial until the following screen is shown:-

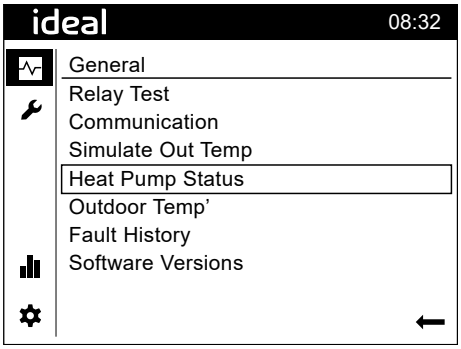

Press the dial and the following screen will be shown:-

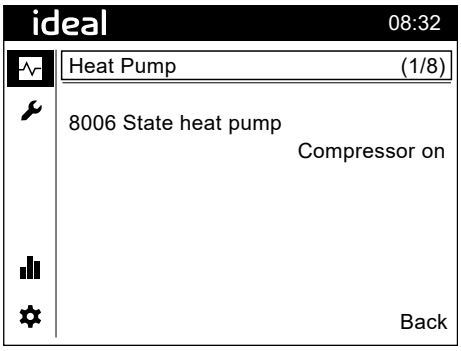

Press the dial and rotate the dial to see additional information.

The full list of information is as follows:-

- State Heat Pump
- Return temp HP
- Flow temp HP
- Setpoint HP
- Compressor 1
- Compressor modulation
- Primary pump
- Primary Pump Speed
- Primary water flow

VIEW ACTUAL & AVERAGED OUTSIDE TEMPERATURE

Having changed the Access Level from End User to Installer, the following screen will be shown:-

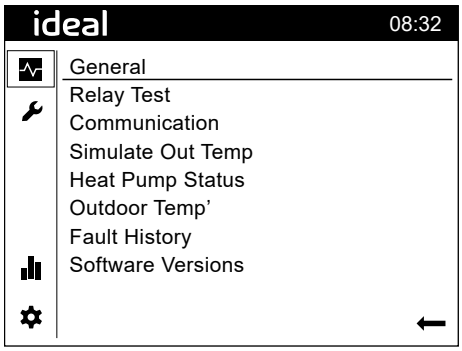

If you would like to see the actual and averaged outside temperature, press the dial and rotate the dial until the following screen is shown:-

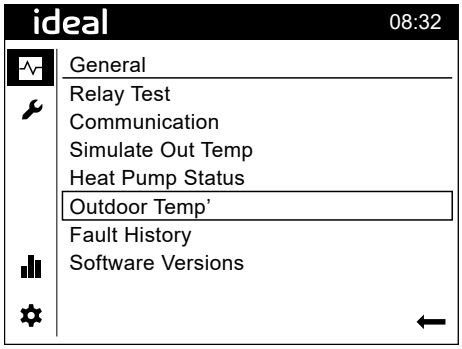

Press the dial and the following screen will be shown:-

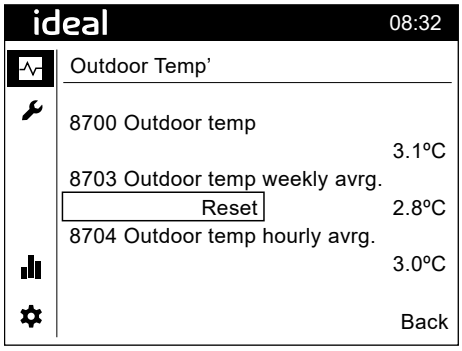

Outside temperature attenuated is averaged outside temperature.

Outside temperature composite is a further averaging of the attenuated outside temperature and the actual outside temperature.

FAULT HISTORY

Having changed the Access Level from End User to Installer, the following screen will be shown:-

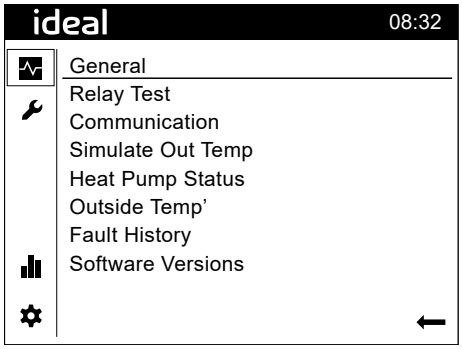

If you would like to see the Fault History, press the dial and rotate the dial until the following screen is shown:-

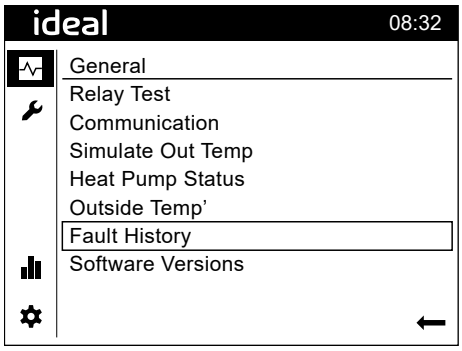

Press the dial and the following screen will be shown:-

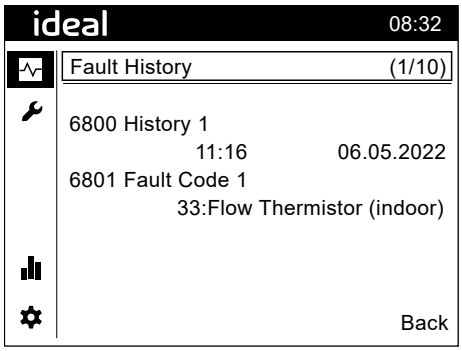

To see previous faults, press the dial and then rotate.

ACCESS ALL PARAMETERS

Having changed the Access Level from End User to Installer, the following screen will be shown:-

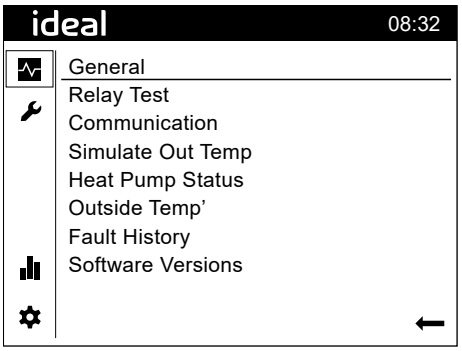

If you would like to access all the parameters, rotate the dial until the spanner symbol is highlighted and press the dial then the following screen is shown:-

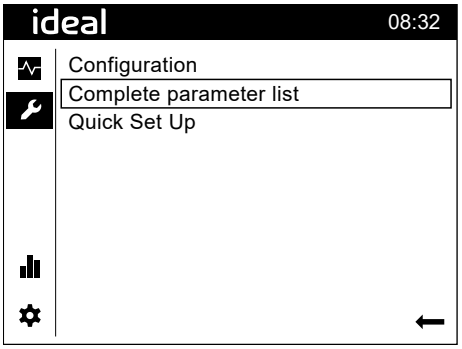

Rotate the dial until Complete Parameter List is highlighted and press the dial then the following screen is shown:-

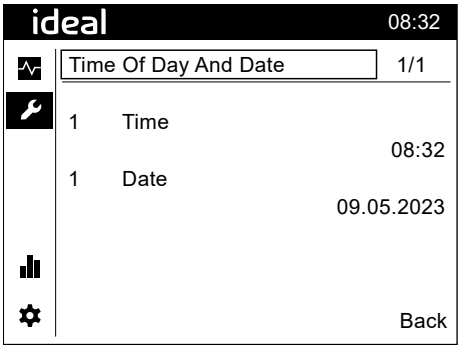

To change parameters rotate the dial, press the dial, rotate the dial to change the parameter and then press the dial to save.

To see additional press the dial and rotate the dial.

CHANGING OPTIMISATION TIME

Note. This setting should be altered via the Halo Air, if one is fitted.

Having changed the Access Level from End User to Installer, the following screen will be shown:-

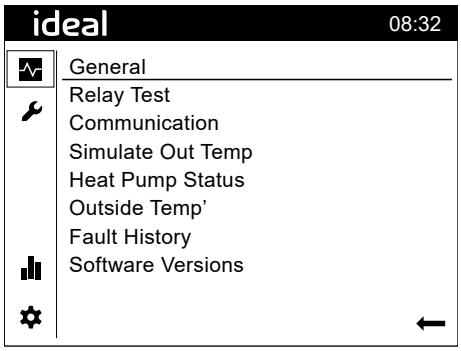

If you would like to change the optimisation time, rotate the dial until the spanner symbol is highlighted and press the dial then the following screen is shown:-

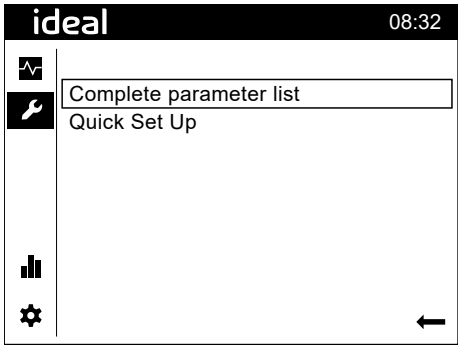

Rotate the dial until Complete Parameter List is highlighted and press the dial then the following screen is shown:-

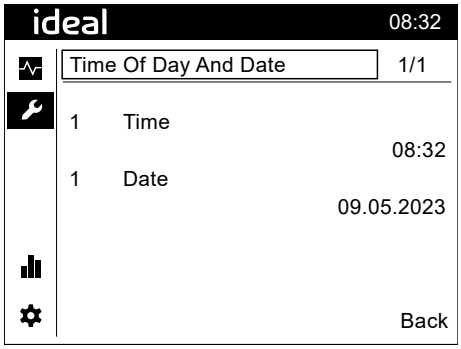

Press the dial and rotate until Heating circuit 1 is shown.

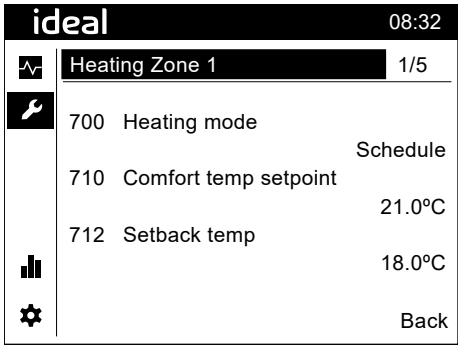

Press the dial.

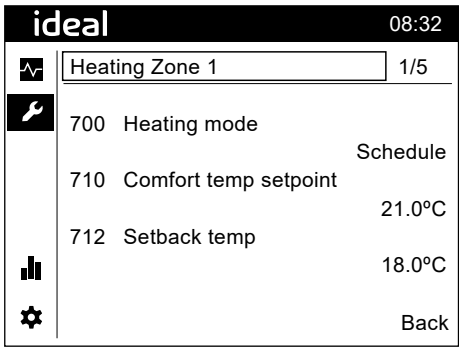

Rotate the dial so that 1/5 is **shown**.

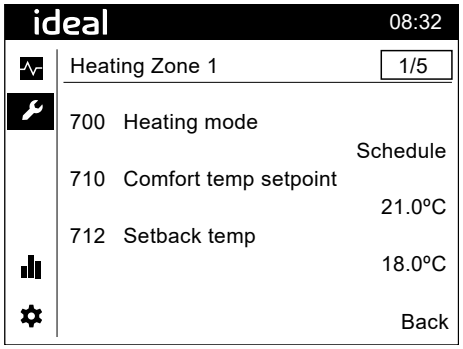

Press the dial.

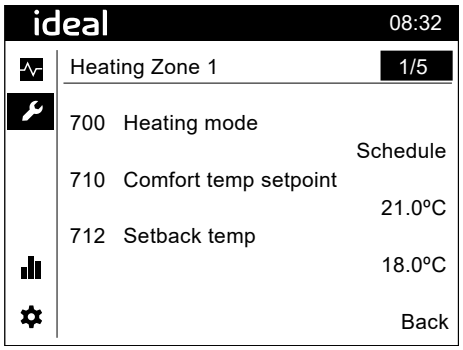

Rotate the dial so that 4/5 is shown.

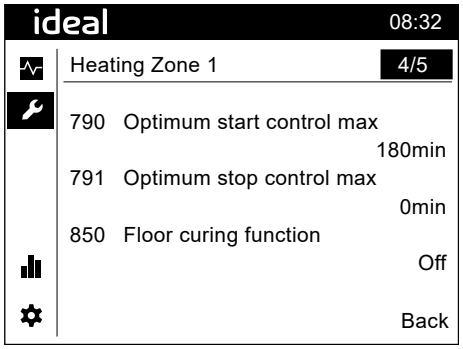

Press the dial and then rotate so that Optimum start control max is highlighted.

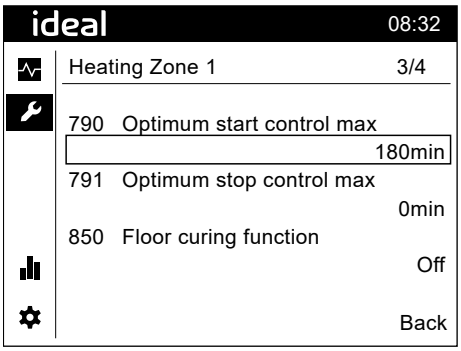

Press the dial and then rotate so that Optimisation is set to the required setting.

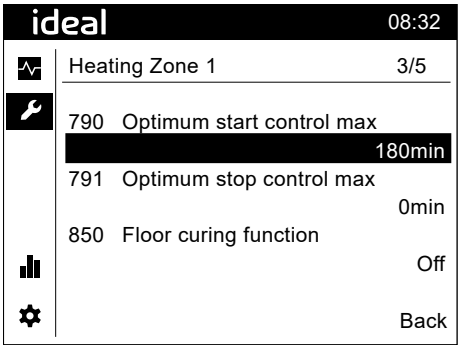

CHANGING COMPENSATION CURVES

Having changed the Access Level from End User to Installer, the following screen will be shown:-

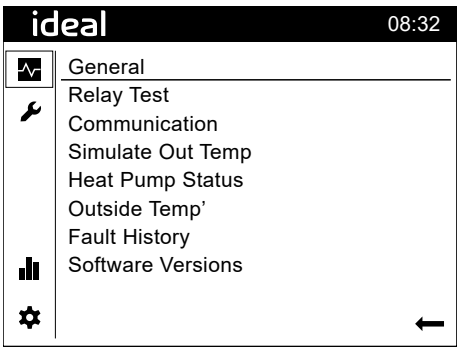

Rotate the dial until the following screen is shown:-

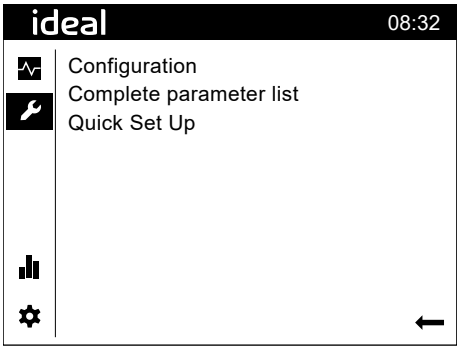

Press the dial, then rotate the dial until "Complete parameter list" is highlighted and then press the dial again so that the following screen is shown:-

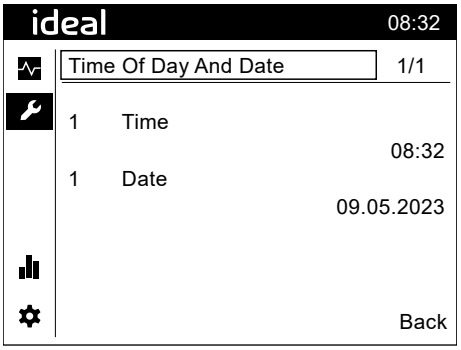

Press the dial, then rotate the dial until the following screen is shown:-

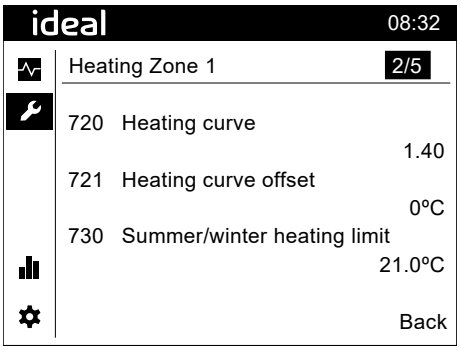

Press the dial, then rotate the dial until "2/5" is shown at the top right. Then press the dial again and rotate the dial until "1.40" is highlighted. Press the dial and then rotate the dial until the desired curve is shown. Press the dial to save.

CHANGING THE LOGIC AIR PUMP SPEED

Having changed the Access Level from End User to Installer the following screen will be shown:-

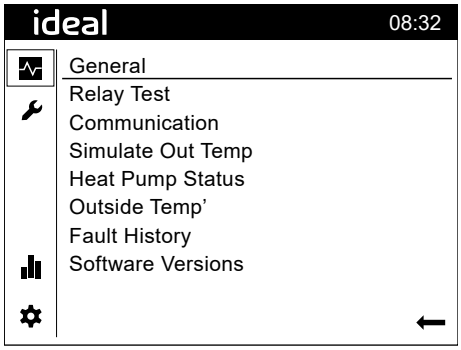

Rotate the dial until the following screen is shown:-

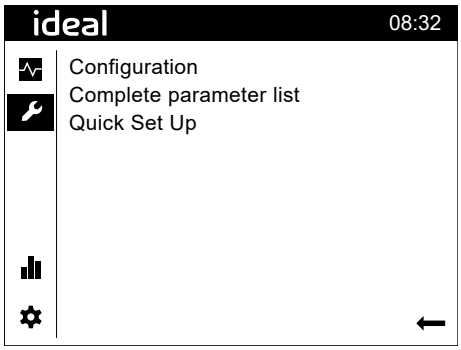

Press the dial, then rotate the dial until "Complete parameter list" is highlighted and then press the dial again so that the following screen is shown:-

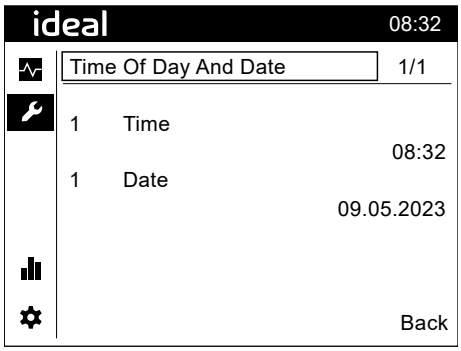

Press the dial, then rotate the dial until the following screen is shown:-

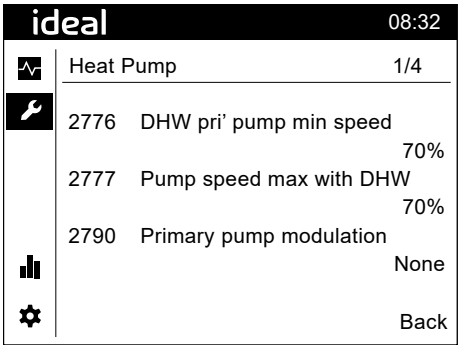

Press the dial, then rotate the dial until "2/4" is shown at the top right of the screen

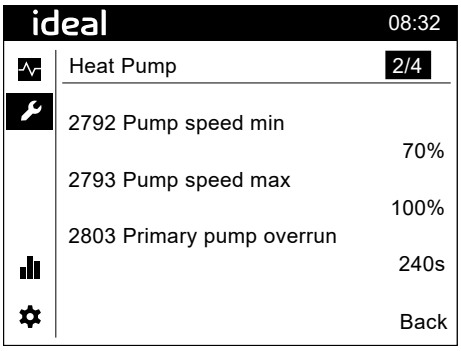

Press the dial, then rotate the dial until "Pump speed max" is highlighted. Press the dial, then rotate the dial until the desired setting is displayed. Press the dial to save.

RE-COMMISSION HEAT PUMP

Having changed the Access Level from End User to Installer, the following screen will be shown:-

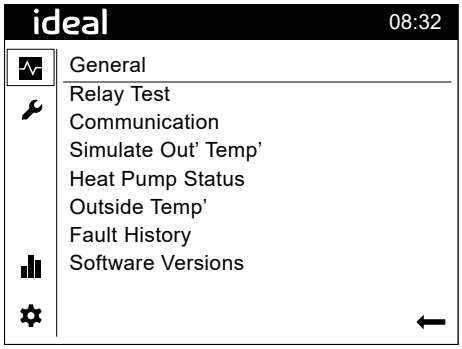

If you would like to recommission the heat pump, rotate the dial until the spanner symbol is highlighted and press the dial then the following screen is shown:-

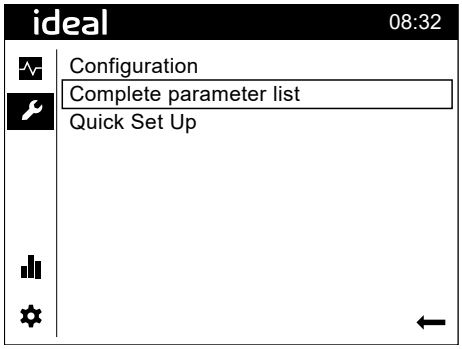

Rotate the dial until Quick Set Up is highlighted and press the dial.

ⓘ **IMPORTANT: If the heat pump is installed with a Halo Air, after any changes to the heat pump parameters, make sure to press the "Override" button on the Halo Interface to synchronise the upated parameters. If the "Override" button is not pressed any amended parameters will not be updated to the Halo thermostat.**

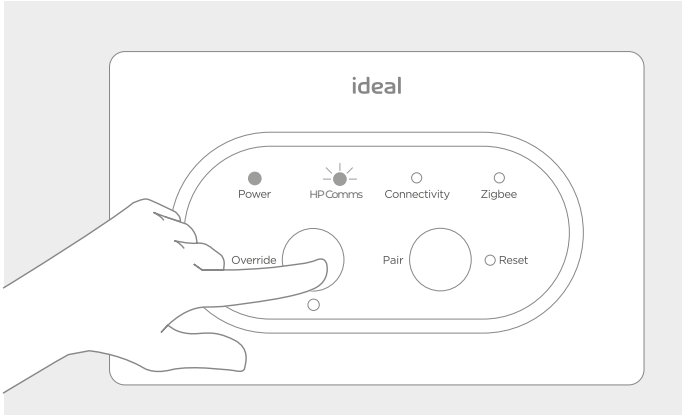

5.7.3 Logic Air, Zone 1 Halo, Zone 2 On/Off Room Stat

To control central heating zone 1 using a Halo Air Single Zone and central heating zone 2 with an on/off programmable room thermostat proceed as follows: -

1. 1 Wire the Halo Air Smart Interface to the Halo Air Interface connections within the Logic Air Indoor Control Box. The link in Zone 1 On/Off Thermostat connection must be left in place. Consult the Halo Air instructions for how to configure.
2. 2 Wire the on/off programmable room thermostat to the Zone 2 On/Off Thermostat connection within the Logic Air Indoor Control Box. Set the on/off times and temperatures on the third-party thermostat as required, noting that a minimum optimisation period of 2 hours should be set and that the reduced target temperature should be no more than 3°C less than the comfort temperature. The Comfort and Setback temperatures of zone 2 on the Logic Air Controller must both be set to 21°C.

If both zones are calling together then the higher target flow temperature will be used. Zone 1 will use a flow temperature calculated using the outside temperature, zone 1 target room temperature and zone 1 actual room temperature, whereas zone 2 will just use the outside temperature and the call for heat from the on/off programmable room thermostat.

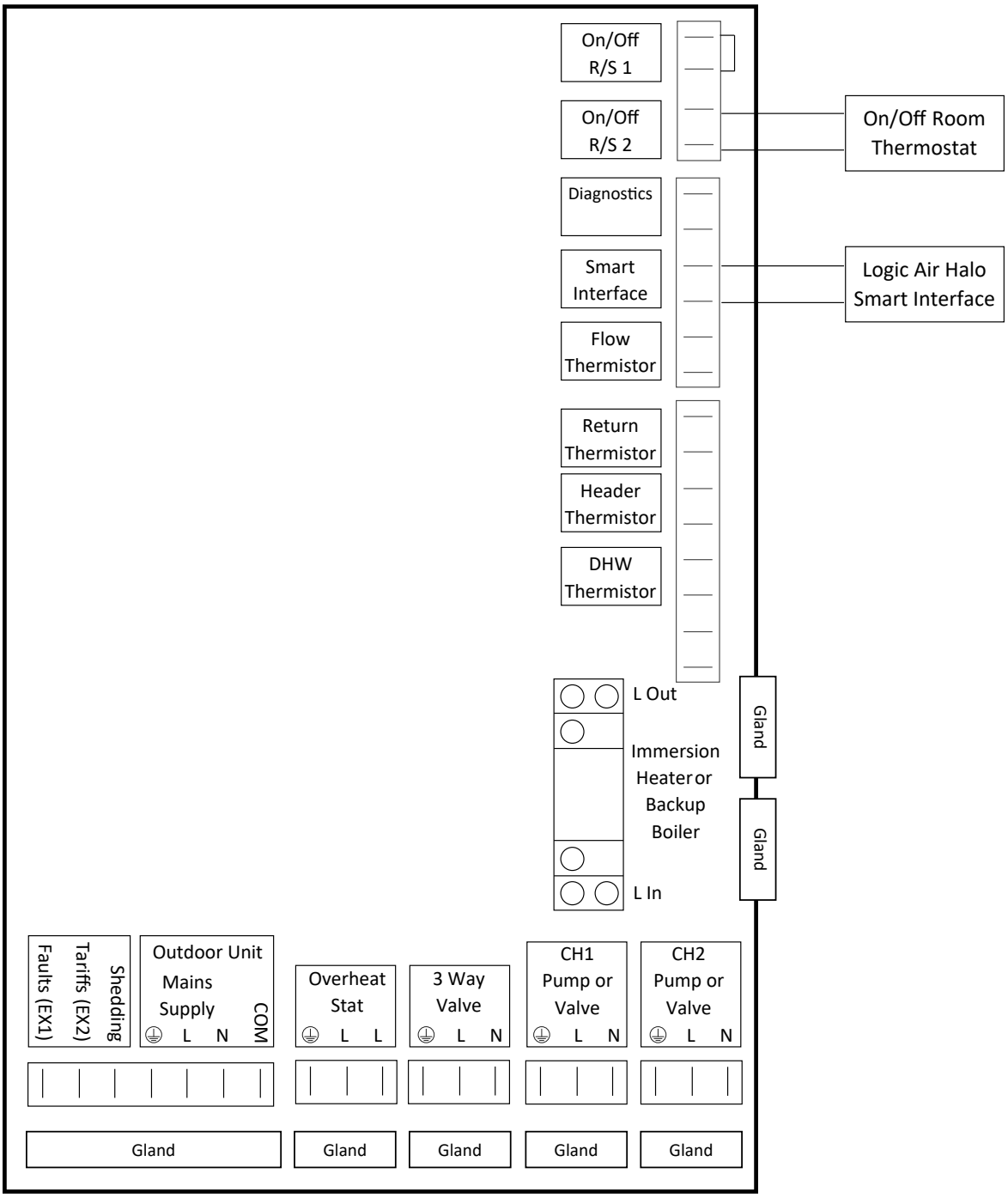

Figure 42. Logic Air Zone 1 Halo, Zone 2 On/Off Room Stat

COMMISSIONING

5.7.4 Weather Compensation Variants

5.7.4.1 Independent Weather Compensation

Weather compensation regulates and maintains optimum flow temperatures which allows the heat pump to run more efficiently.

This function will modulate the water flow temperature relative to the external ambient temperatures. The lower the ambient temperature, the higher the flow temperature and vice versa.

The below graph illustrates the available gradients referenced at numerous outdoor temperatures against the heat pump water flow temperatures.

The flow temperature is calculated based on the heating curve, depending on the composite outside temperature.

This compensation variant demands a correct adjustment of the heating curve since in that case the control gives no consideration to the room temperature.

The weather compensation function is initiated with a permanently enabled outdoor sensor supplied with the Heat Pump unit. The below Illustrations have been provided for the location of the outdoor sensor and the relating resistance curve:

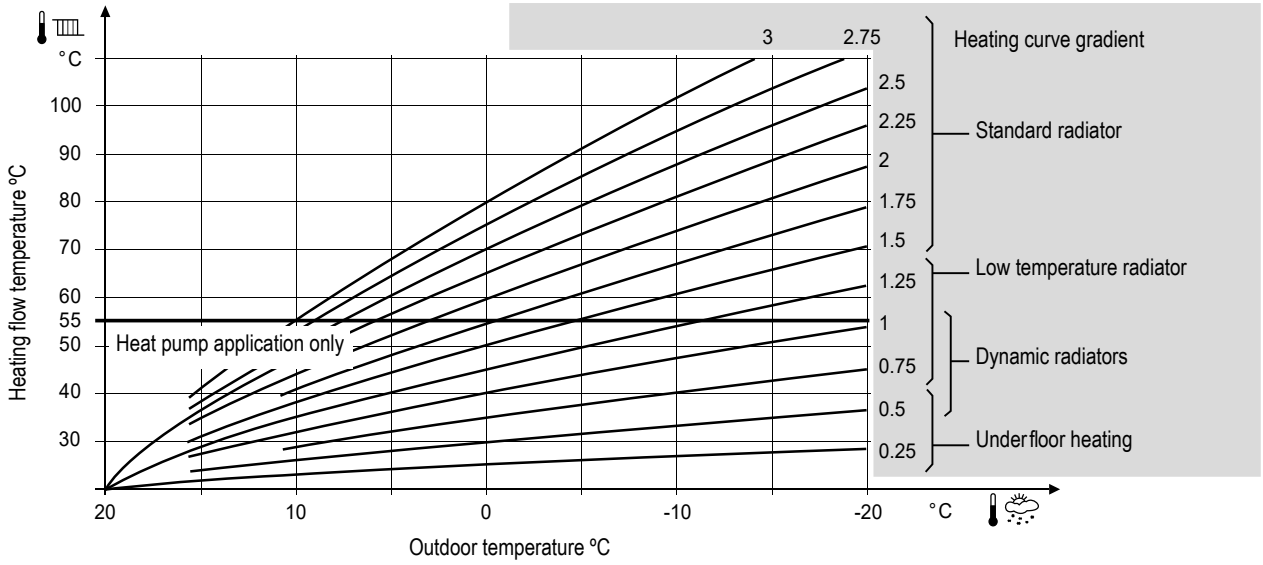

Figure 43. Logic Air Compensation Curves vs Flow Temperature Settings Available

The flow temperature is calculated via the heating curve and is dependent on the outside ambient temperature. This compensation variant calls for a correct adjustment of the heating curve because with this setting the control system gives no consideration to the room temperature.

For additional information the parallel displacement options have also been provided to allow optimisation of the weather compensation curve according to dwellings comfort temperature

5.7.4.2 Combined Weather and Room Compensation

The deviation of the current room temperature from the setpoint is acquired and taken into account when controlling the room temperature. This way, consideration is given to room temperature deviations, ensuring more accurate room temperature control. The authority of the deviation is set as a percentage value.

The better the reference room conditions (correct room temperature, correct mounting location, etc.) the higher the value can be set.

30 - 40 % Underfloor Heating

20 % Radiators

To provide the function, following must be considered:

- A Halo Air must be connected
- "Room influence" must be set to a value between 1 and 99
- There should be no thermostatic radiator valves in the reference room (mounting location of room sensor); if such valves are installed, they must be fully opened

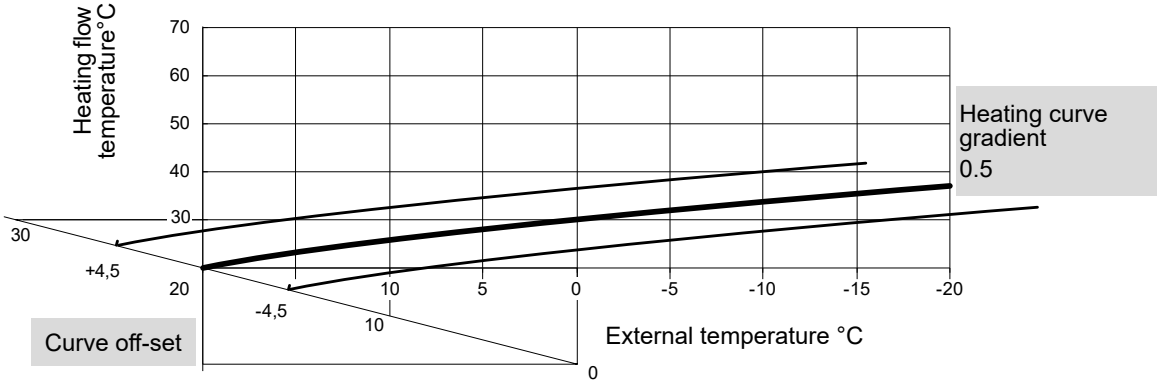

Figure 44. Weather Compensation with Room Influence (example at gradient 0.5)

⚠ **WARNING: All maintenance and servicing tasks must be carried out by a competent and sufficiently qualified engineer.**

Work that requires the removal of the exterior casing of the Heat Pump must only be carried out by competent persons who are familiar with the risks of R32 refrigerant.

Work on the refrigeration circuit must only be carried out by a Cat I or Cat II F-gas certified engineer.

Work on electrical systems must only be carried out by competent persons.

Refrigerant should never be released into the atmosphere. Refrigerant is to always be collected and recycled using a suitable recycling unit.

6.1 OVERALL MAINTENANCE PLAN TABLE

ⓘ **IMPORTANT: Ideally, maintenance activities should be scheduled during times where there is little heating demand to avoid disruption to the end user.**

To keep the appliance operating as efficiently as possible the maintenance listed in *Table 16* should be conducted annually. Failure to do so could affect the appliance warranty.

Table 16 Maintenance Tasks

Maintenance Task	Frequency
Heat Pump Inspection & Maintenance	1 year
DHW Cylinder Inspection & Maintenance	1 year
Control Box Inspection & Maintenance	1 year
System Inspection & Maintenance	1 year
Water Quality Treatment	1 year

6.2 HEAT PUMP SERVICE & MAINTENANCE PROCEDURE

⚠ WARNING: Before removing any covers or casing, make sure that the electrical power supply is isolated.

⚠ CAUTION: Any damage to paint is to be repaired using a suitable paint to prevent corrosion of the casing and compromising the assembly.

⚠ CAUTION: Compressed air and High pressure water jets i.e. pressure washers must not be used on the Logic Air. The use of high pressure water jets will damage the unit.

Prior to maintenance, a discussion with the end user should occur. The end user should be asked about whether there have been any notable events or concerns since the last work was done on the Heat Pump. The end user is to be specifically asked whether there have been any issues with noise, vibration, condensate production, performance, damage, or any other disturbances.

Any damage found during the inspection and maintenance checks listed in this document must be repaired and documented.

6.2.1 Logic Air Monobloc Heat Pump Checks

- Access the Logic Air Monobloc outdoor unit.
- Assess if the installation conforms to the Installation Instructions and rectify any faults.
- Confirm correctly rated circuit breakers are fitted at the consumer unit.
- Conduct Safe Electrical Isolation.
- Remove service panel, *Figure 45*, and inspect the following:
  - All electrical connections for signs of damage / loose connections etc.
  - All refrigerant pipework and joints for signs of oil deposits.
  - Evaporator condition.
  - Fan assembly.
- Release air from auto air vent and close off.
- Replace casing panels and remove fan grille.
- The evaporator can be cleaned with a proprietary cleaner.
- Wash down the outer casing and rinse off.
- Wash down the fan impeller assembly.
- Replace fan grille.
- Rinse off the evaporator to remove dirt, debris and any cleaner using ONLY a low pressure water spray.
- Clean any installed filter ball strainer as required.
- Check and record Glycol levels or visually inspect antifreeze valves.
- Check system inhibitor levels where Glycol is absent.
- Check external pipework insulation.

To access the refrigerant circuit pipework and the electrical components, the side panel can be taken off by removing the 5 screws shown in *Figure 45.*

The panel can then be slid downwards and removed.

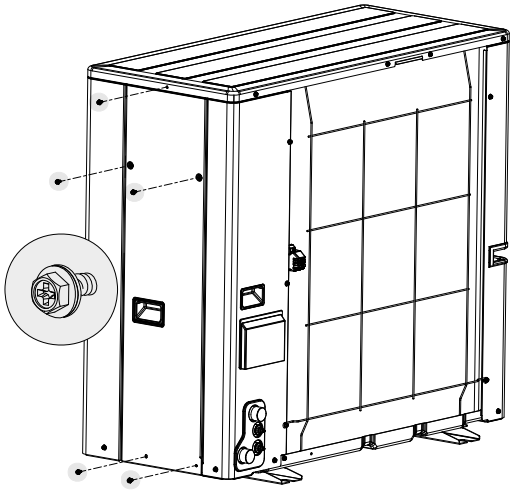

Figure 45. Heat Pump - Side Panel Removal

INSP & MAINT

6.2.2 Logic Air Controller Checks

- Access Logic Air Controller (Wall Mounted or Pre-Plumbed version).
- Assess if the installation conforms to the Installation Instructions and rectify any faults.
- Conduct Safe Electrical Isolation.

⚠ CAUTION: The control box may have dual electrical supplies (a power supply from the outdoor unit and a power supply for the DHW Cylinder immersion Heater). Both must be isolated before removing the control box front panel.

- Remove Front Panel, refer to *Figure 46* and inspect all electrical connection for signs of damage / loose connections etc.
- Replace Front panel and remove electrical isolation.
- Check and record legionella settings.
- Check and record weather compensation settings.
- Hot Water Set Temperature.
- Time and Date Set Correctly?
- Fault History recorded.
- Put the unit into DHW operation and check and record the flow rate.
- Put the unit into CH operation and check and record the flow rate.
- Confirm correct operation of the 3-way valve.
- Confirm correct operation of secondary pumps.
- Confirm the system warms correctly.
- Confirm correct operation of the customer controls including confirming settings with the customer.
- Record consumption meter reading is fitted.
- Record generation meter readings if fitted.

To allow for inspection, the casing must be removed by removing the four screws displayed in *Figure 46*.

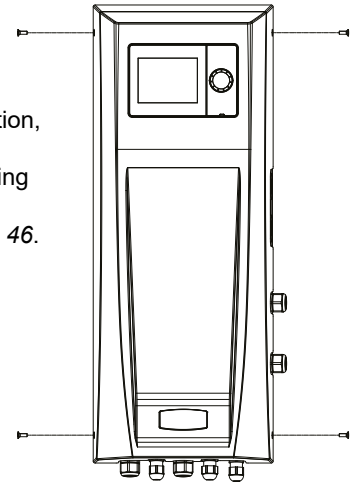

Figure 46. Front Panel Removal

6.2.3 Logic Air Domestic Hot Water Cylinder and System Checks

- Access Logic Air Domestic Hot Water Cylinder.
- Isolate the cold supply to the cylinder. Remove the inlet control valve. Inspect the gauze filter on the inlet side and remove any debris.
- Ensure the CH and DHW are turned off on the controller.
- 'Reduce the central heating system pressure from a suitable drain point and check the Central Heating Expansion vessel for pre-charge of 1 bar. Re-pressurise as required.
- Isolate magnetic system filter and clean magnet and mesh filter.
- Re-pressurise the system to 1 bar (considering the position of the gauge in relation to the heat pump).
- Manually check the operation of the temperature relief valve.
- Manually check the operation of the hot water cylinder expansion and pressure relief.
- Check discharge pipes from temperature and expansion relief valves are free from obstruction and blockage and are not passing any water.
- Check that water pressure downstream of the pressure reducing valve is within the manufacturer's limits.
- Check the pre-charge of the domestic hot water expansion vessel (3 bar) and re-pressurise as required. This must be done with the cold main to the cylinder isolated and a draw off open to release any pressure.
- Isolate the immersion heater supply.
- Conduct safe electrical isolation at the immersion heater.
- Check the immersion heater thermostat is turned to MAX.
- Re-energise the immersion supply.
- Confirm the DHW sensor is secure in its pocket.
- Check and advise the householder not to place any clothing or other combustible materials against or on top of this appliance.

6.2.4 Service Records

- On completion of the work, fill in the Benchmark Service Record for both the Air Source Heat Pump and the DHW Cylinder.

6.2.5 Fault History

To use the control screen the dial can be rotated clockwise to move selection downwards, anti-clockwise to move selection upwards, and pressed to select. When options are selected, the dial can be turned to cycle through the setting options. To exit menus or return to previous screens, a selectable option will be displayed at the bottom of the screen.

The fault codes on the control box are to be reviewed through the following method:

1. Select the settings ⚙ option.
2. Changing the user level to installer.
3. Enter the password.
4. If successful, this will then show the 'General' menu.
5. Select the 'General' menu and then select ‘Fault History’.
6. In this menu, the previous 10 faults can be scrolled through by selecting ‘Fault History (1/10)’ and scrolling.

Faults are to be reviewed for unexpected errors.

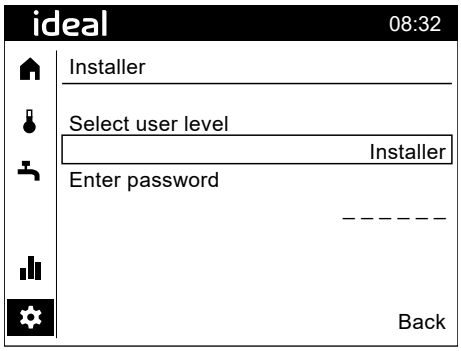

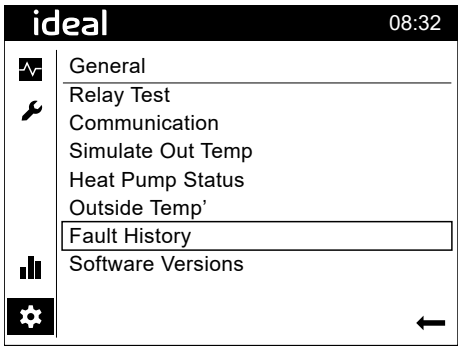

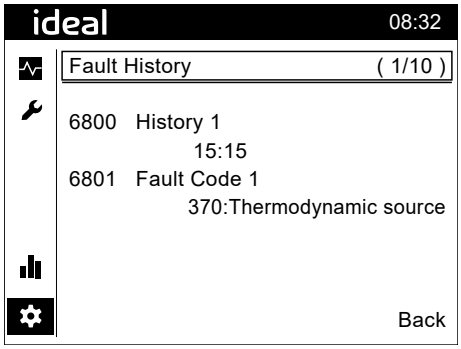

6.2.6 Update the Settings

The end user is to be surveyed on their heating performance comfort levels. Any issues are to be addressed and settings to be updated accordingly to improve the end users. For setting instructions see Section *5.7.*

7.1 DE-COMMISSIONING

⚠ WARNING: The product contains the fluorinated refrigerant R-32 which is mildly flammable. The refrigerant may mix with air to form a flammable atmosphere increasing the risk of fire and/or explosion.

⚠ WARNING: If the Heat Pump is to be permanently decommissioned this must be carried out by persons who hold a valid and current F-Gas Directive Cat I or Cat II certificate.

CAUTION: If the Heat Pump is required to be in-active for an extended period of time it must not be switched off.

1. Perform safe isolation of all power supplies.
2. Disconnect the appliance from the power supply but make sure the appliance is still earthed.
3. Drain the heating water from the appliance.
4. Remove service access covers, refer to *Figure 45.*
5. Remove the refrigerant from the appliance and consider the below prior to commencing:
   - Only use tools, electrical power tools and equipment that are suitable for the intended work scope.
   - Wear suitable protective personal equipment (PPE) as necessary.
   - Do not use the appliance compressor to pump the refrigerant out of the product.
   - Do not attempt to recover the refrigerant whilst the appliance is switched on.
6. Re-install the right-hand side casing, the front casing, and the top casing.
7. Clearly label that the appliance so that it is visible from the outside and explicitly states that it has been decommissioned and that the refrigerant has been completely removed.
8. Return the recovered refrigerant in accordance with F-Gas and local regulations.
9. Dispose of or recycle the appliance and/or its components in accordance with local laws and regulations.

8.1 PACKAGING

It is the responsibility of the system installer to correctly dispose and recycle of the products packaging.

8.2 END OF PRODUCT LIFE

8.2.1 Environmental Protection

⚠ WARNING: Under no circumstance should the refrigerant fluid be released into the atmosphere. Any action to remove the refrigerant from the Heat Pump is to be carried out by a competent engineer with a current Cat III, Cat II or Cat I F-Gas certificate.

Ideal Heating strives to use renewable materials and energy resources in our design and production processes. Environmental protection regulations and legislation are to be always obeyed.

8.2.2 WEEE

WEEE DIRECTIVE 2012/19/EU

Waste Electrical and Electronic Equipment Directive

- At the end of the product life, dispose of the packaging and product in a corresponding recycle centre.
- Do not dispose of the unit with the usual domestic refuse.
- Do not burn the product.
- Remove the batteries.
- Dispose of the batteries according to the local statutory requirements and not with the usual domestic refuse.

8.2.3 Environmental Disposal

Used products contain valuable material that can be harvested and recycled.

Heat Pump Disposal

The Heat Pump must be dismantled and recycled by a specialised service. The appliances must not under any circumstances, be thrown out with household waste, or at a general waste centre. At the end of its service life, please contact an installer or local representative to proceed with its dismantling and recycling.

When removing refrigerant from a system, either for servicing or decommissioning, it is a legal requirement that all refrigerants are removed safely.

The recovery equipment shall be in good working order with a set of instructions concerning the equipment that is at hand and shall be suitable for the recovery of flammable refrigerants. In addition, a set of calibrated weighing scales shall be available and in good working order. Hoses shall be complete with leak free disconnect couplings and in good condition. Before using the recovery machine, check that it is in satisfactory working order, has been properly maintained and that any associated electrical components are sealed to prevent ignition in the event of a refrigerant release. Consult manufacturer if in doubt.

The recovered refrigerant shall be returned to the refrigerant supplier in the correct recovery cylinder, and the relevant Waste Transfer Note completed. Do not mix refrigerants in recovery units and especially not in cylinders.

If compressors or compressor oils are to be removed, ensure that they have been evacuated to an acceptable level to make certain that flammable refrigerant does not remain within the lubricant. The evacuation process shall be carried out prior to returning the compressor to the suppliers.

9.1 FAULT HELP

9.1.1 Fault Codes

⚠ WARNING: All maintenance and servicing tasks must be carried out by a competent and sufficiently qualified engineer.

Work that requires the removal of the exterior casing of the Heat Pump must only be carried out by competent persons who are familiar with the risks of R32 refrigerant.

Work on the refrigeration circuit must only be carried out by a Cat I or Cat II F-gas certified engineer.

Work on electrical systems must only be carried out by competent persons.

Refrigerant should never be released into the atmosphere. Refrigerant is to always be collected and recycled using a suitable recycling unit.

10	Outside Sensor Fault	>	Go to: 9.1.2 Outside Sensor Fault	
26	Header Thermistor Fault	>	Go to: 9.1.3 Header Thermistor Fault (used for Cascade Systems)	
33	Flow Thermistor (Indoor) Fault	>	Go to: 9.1.5 Flow Thermistor (Indoor) Fault	
44	Return Thermistor Fault	>	Go to: 9.1.6 Return Thermistor Fault	
50	DHW Thermistor Fault	>	Go to: 9.1.7 DHW Thermistor Fault	
60	Room Stat 1 Fault	>	Go to: 9.1.8 Room Thermostat 1 Fault	
65	Room Stat 2 Fault	>	Go to: 9.1.9 Room Thermostat 2 Fault	
81	LPB short-circuit/comm Fault	>	Go to: 9.1.10 LPB (Cascade) Short-Circuit/Communication Fault	
82	LPB address collision Fault	>	Go to: 9.1.11 LPB (Cascade) Address Collision Fault	
83	BSB short circuit Fault	>	Go to: 9.1.12 BSB Short Circuit Fault	
84	BSB address collision	>	Go to: 9.1.13 BSB Address Collision Fault	
100	2 clock time masters Fault	>	Go to: 9.1.14 2 Clock Time Masters Fault	
102	Clock without backup Fault	>	Go to: 9.1.15 Clock Without Back-up Fault	
106	Source Temp too low	>	Go to: 9.1.16 Source temp too low	
126	7093 DHW Setpt Fault	>	Go to: 9.1.17 7093 DHW Setpoint Fault	
127	Anti-Legionella Temp' Fault	>	Go to: 9.1.18 Anti-Legionella Temperature Fault	
134	Re-occurring Heat Pump Fault	>	Go to: 9.1.19 Re-occurring Heat Pump Fault	
146	Configuration error	>	Go to: 9.1.19 Re-occurring Heat Pump Fault	
171	Alarm contact 1 active Fault	>	Go to: 9.1.21 Alarm Contact 1 Active Fault	
366	Room temp sensor Fault	>	Go to: 9.1.22 Room Temperature Sensor Fault	
369	External Fault	>	Go to: 9.1.23 External Fault	
385	Low Mains Voltage Fault	>	Go to: 9.1.24 Low Mains Voltage Fault	
489	No Cascade Master Fault	>	Go to: 9.1.25 No Cascade Master Fault	
490	No outdoor connection Fault	>	Go to: 9.1.26 No Outdoor Connection Fault	
499	No outdoor connection Fault	>	Go to: 9.1.26 No Outdoor Connection Fault	
506	Boiler no temp' rise Fault	>	Go to: 9.1.27 Back-up Boiler no Temperature Rise Fault	
516	No outdoor connection Fault	>	Go to: 9.1.26 No Outdoor Connection Fault	
7	No heat pump starts exceeded	>	Go to: 9.1.28 Number of Heat Pump Starts Exceeded	
	No Hot Water	>	Go to: 9.1.30 No Hot Water but Central Heating works OK	
	No Central Heating	>	Go to: 9.1.29 No Central Heating but Hot Water works OK	
	No Display	>	Go to: 9.1.31 No Display on Indoor Unit	
370	Heat Pump fault:- F0 No outdoor connection fault	>	Scan QR code and go to section: Troubleshooting 1	Refer to Fault Guides in the Logic Air Maintenance Manual SCAN for Maintenance Manual ⓘ NFO: For further diagnosis of faults, refer to the LED sequence displayed on the Control Box Interface PCB. LED sequence and corresponding faults are referenced in the Logic Air Maintenance Manual (scan QR code above).
370	Heat Pump fault:- F1 No outdoor connection fault	>	Scan QR code and go to section: Troubleshooting 2	
370	Heat Pump fault:- F2 Outdoor HX thermistor fault	>	Scan QR code and go to section: Troubleshooting 15	
370	Heat Pump fault:- F3 Heat pump inverter fault	>	Scan QR code and go to section: Troubleshooting 6	
370	Heat Pump fault:- F4 Outdoor electrical filtering fault	>	Scan QR code and go to section: Troubleshooting 7	
370	Heat Pump fault:- F5 Outdoor discharge thermistor	>	Scan QR code and go to section: Troubleshooting 7	
370	Heat Pump fault:- F6 Compressor thermistor fault	>	Scan QR code and go to section: Troubleshooting 8	
370	Heat Pump fault:- F7 Outdoor intermediate HX thermistor	>	Scan QR code and go to section: Troubleshooting 9	
370	Heat Pump fault:- F8 Outdoor outlet HX thermistor	>	Scan QR code and go to section: Troubleshooting 13	
370	Heat Pump fault:- F9 Heat Pump defrost thermistor fault	>	Scan QR code and go to section: Troubleshooting 12	
370	Heat Pump fault:- F10 Outdoor heatsink thmr fault	>	Scan QR code and go to section: Troubleshooting 11	
370	Heat Pump fault:- F11 outdoor PFC thermistor fault	>	Scan QR code and go to section: Troubleshooting 25	
370	Heat Pump fault:- F12 Outdoor exp valve thmr	>	Scan QR code and go to section: Troubleshooting 12	
370	Heat Pump fault:- F13 Outdoor electrical error	>	Scan QR code and go to section: Troubleshooting 16	
370	Heat Pump fault:- F14 outdoor pressure sensor fault	>	Scan QR code and go to section: Troubleshooting 15-2	
370	Heat Pump fault:- F15 Current Trip	>	Scan QR code and go to section: Troubleshooting 16	
370	Heat Pump fault:- F16 Heat pump compressor fault	>	Scan QR code and go to section: Troubleshooting 17	
370	Heat Pump fault:- F17 Heat pump fan fault	>	Scan QR code and go to section: Troubleshooting 18	
370	Heat Pump fault:- F18 Outdoor discharge temp'	>	Scan QR code and go to section: Troubleshooting 20	
370	Heat Pump fault:- F19 Compressor temperature fault	>	Scan QR code and go to section: Troubleshooting 21	
370	Heat Pump fault:- F20 Outdoor low pressure	>	Scan QR code and go to section: Troubleshooting 22	
370	Heat Pump fault:- F21 Outdoor power supply fault	>	Scan QR code and go to section: Troubleshooting 25	
370	Heat Pump fault:- F22 No outdoor connection	>	Scan QR code and go to section: Troubleshooting 1 & 2	
370	Heat Pump fault:- F23 Hydraulic HX temperature	>	Scan QR code and go to section: Troubleshooting 15	
370	Heat Pump fault:- F24 Primary Circulation Pump	>	Scan QR code and go to section: Troubleshooting 19	
370	Heat Pump fault:- F25 Evaporator Outlet Thermistor	>	Scan QR code and go to section: Troubleshooting 15	
370	Heat Pump fault:- F26 Outdoor Power Supply	>	Scan QR code and go to section: Troubleshooting 26	
370	Heat Pump fault:- F27 No water flow fault	>	Scan QR code and go to section: Troubleshooting 24	

9.1.2 Outside Sensor Fault

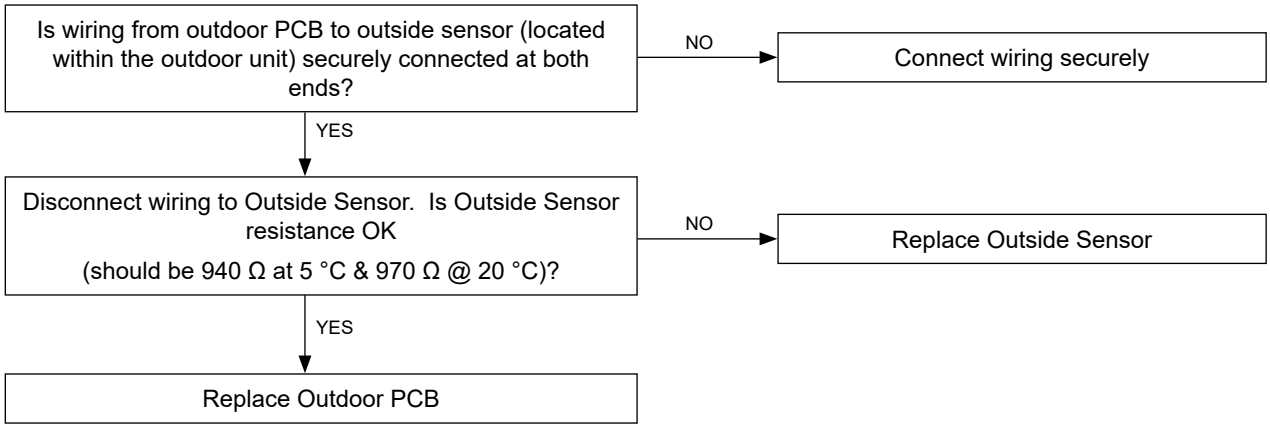

9.1.3 Header Thermistor Fault (used for Cascade Systems)

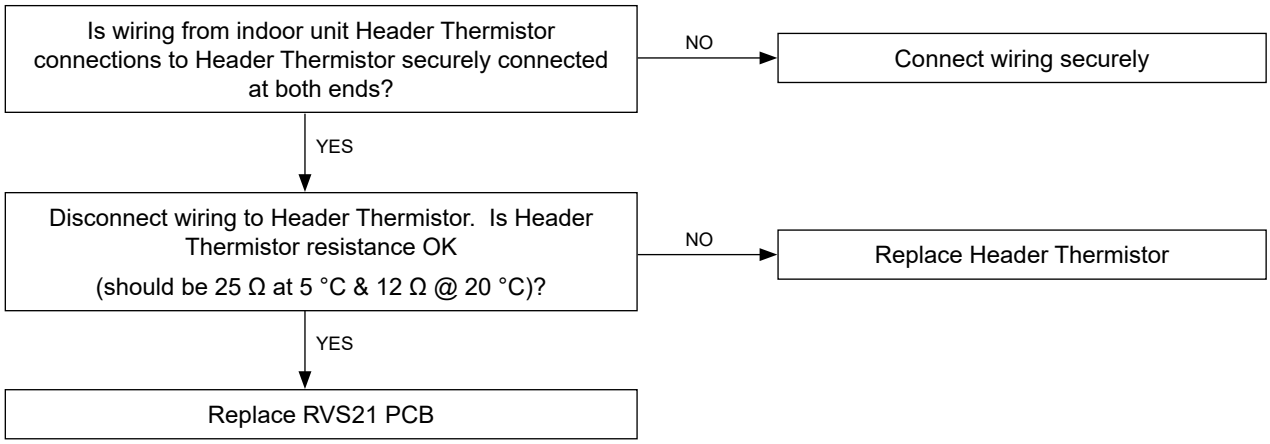

9.1.4 Flow Thermistor (Outdoor) Fault

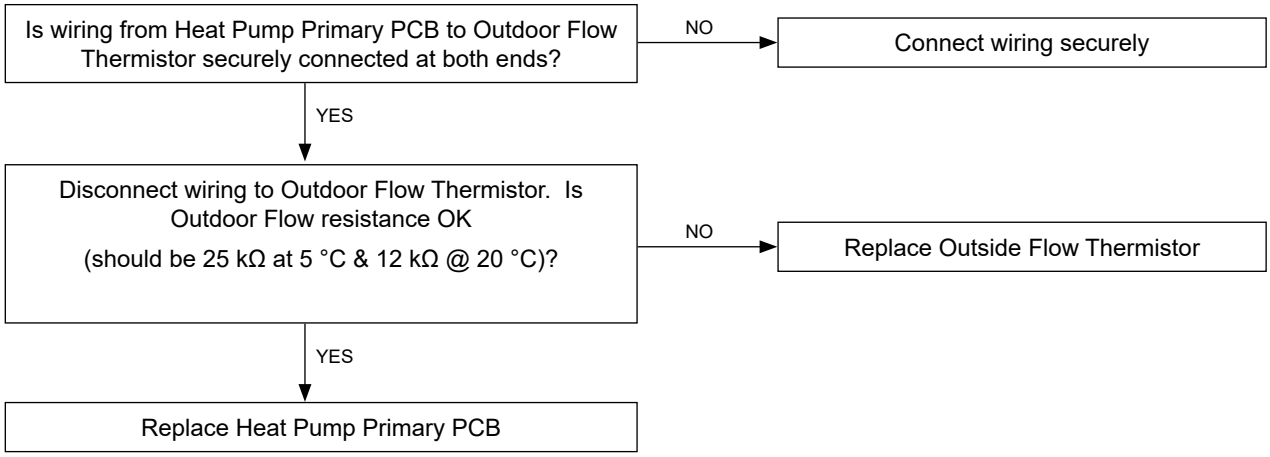

9.1.5 Flow Thermistor (Indoor) Fault

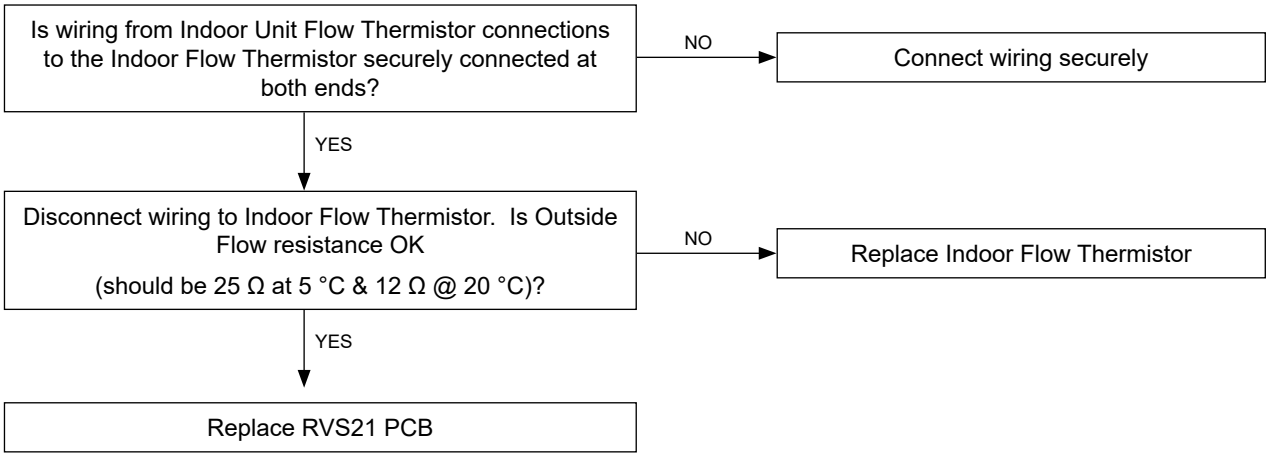

9.1.6 Return Thermistor Fault

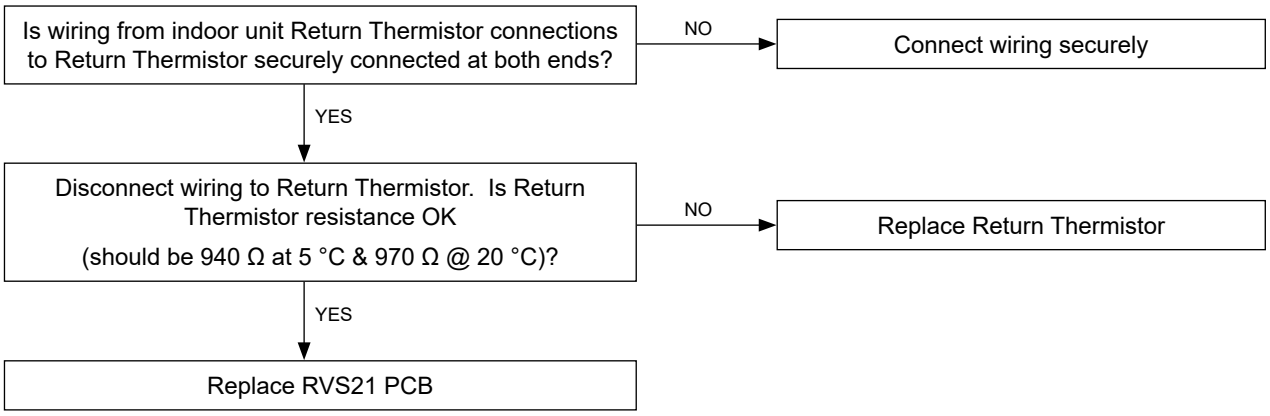

9.1.7 DHW Thermistor Fault

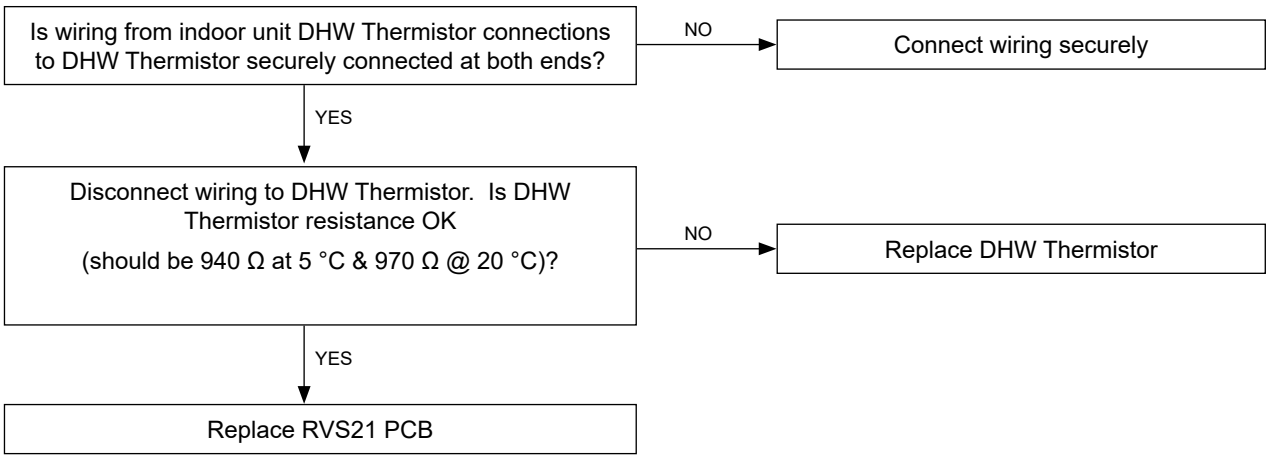

9.1.8 Room Thermostat 1 Fault

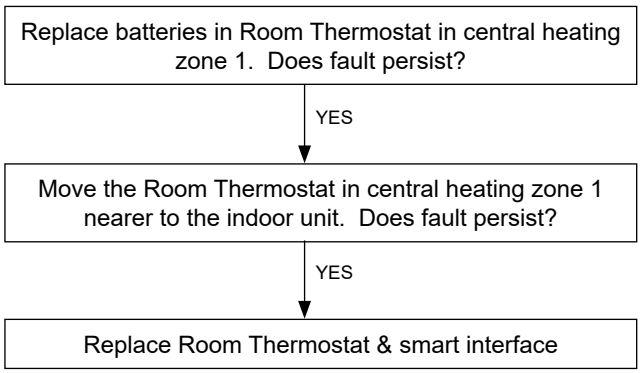

9.1.9 Room Thermostat 2 Fault

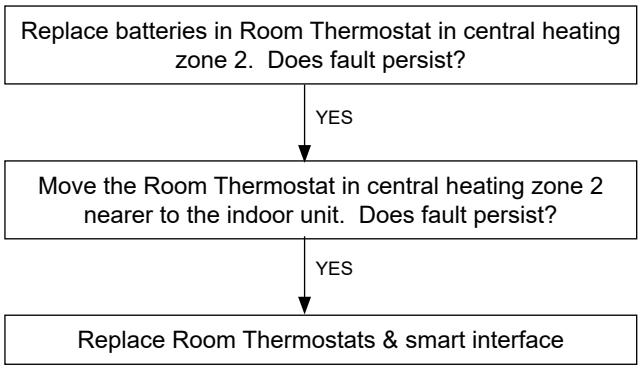

9.1.10 LPB (Cascade) Short-Circuit/Communication Fault

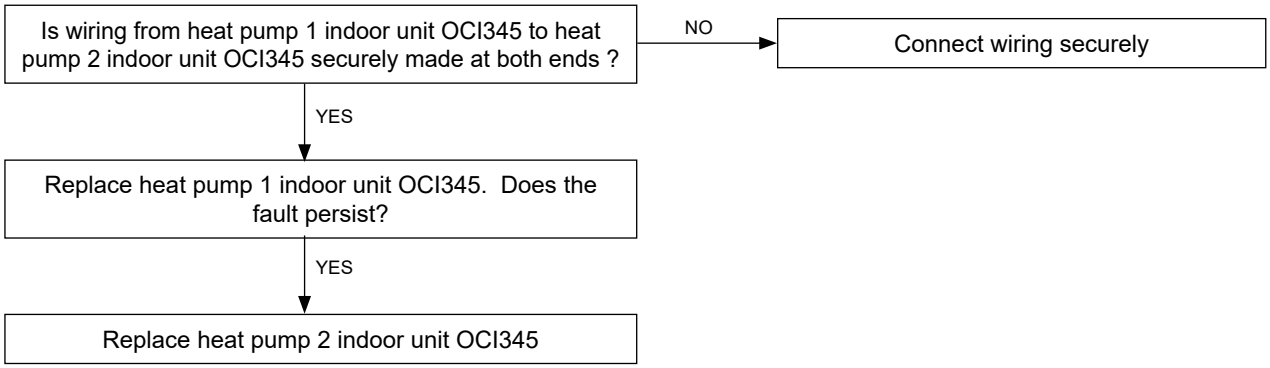

9.1.11 LPB (Cascade) Address Collision Fault

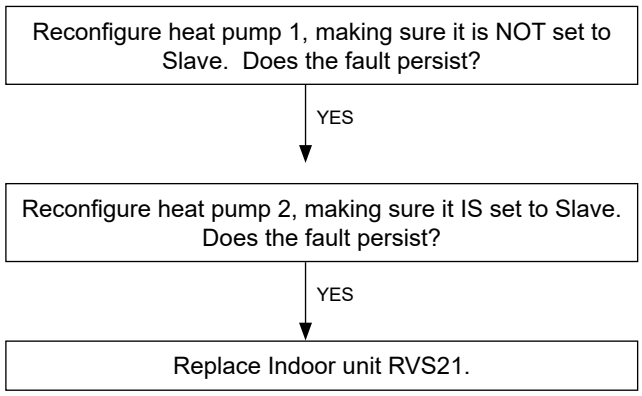

9.1.12 BSB Short Circuit Fault

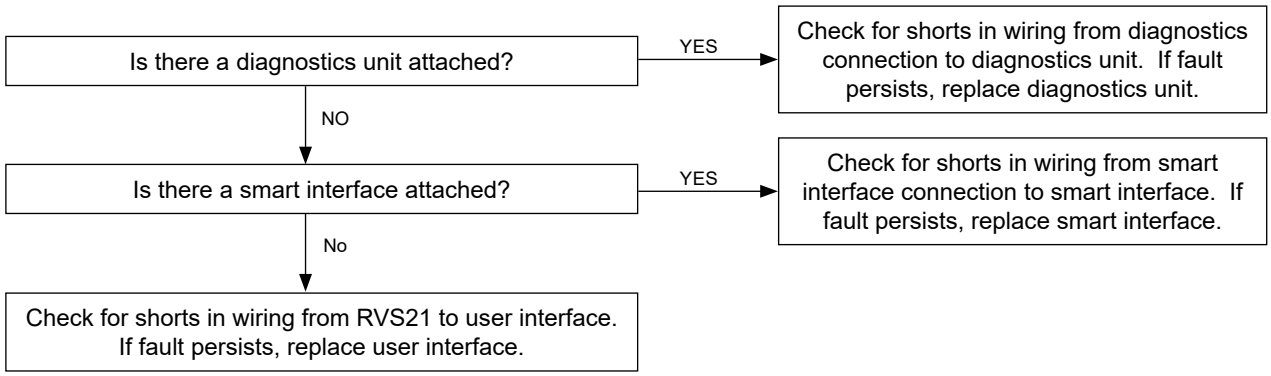

9.1.13 BSB Address Collision Fault

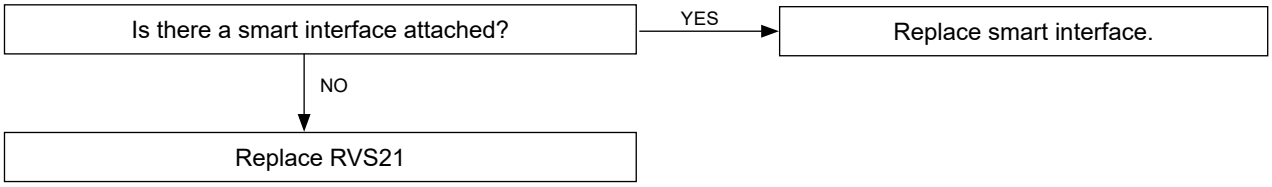

9.1.14 2 Clock Time Masters Fault

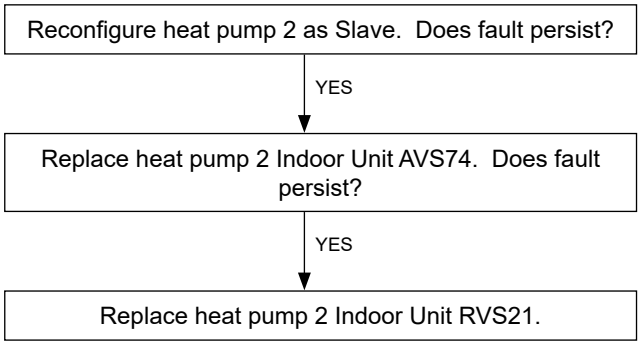

9.1.15 Clock Without Back-up Fault

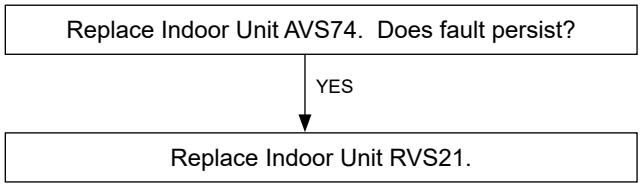

9.1.16 Source Temperature too Low Fault

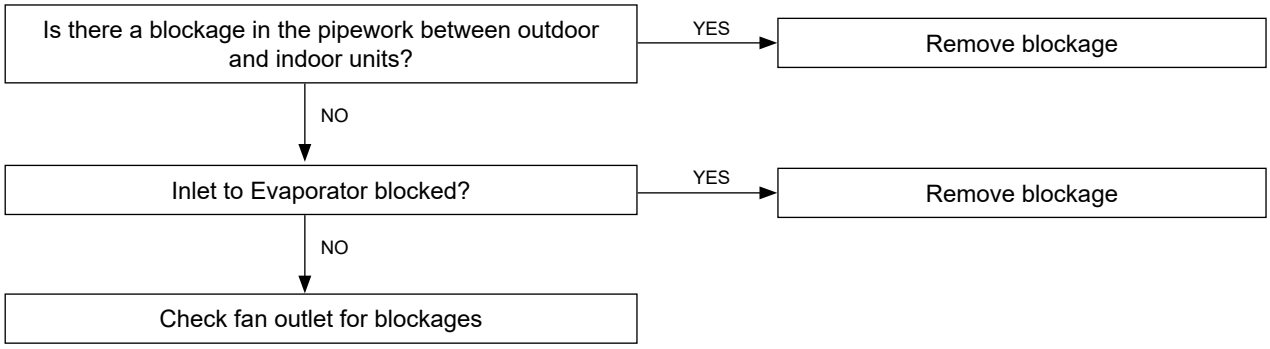

9.1.17 7093 DHW Setpoint Fault

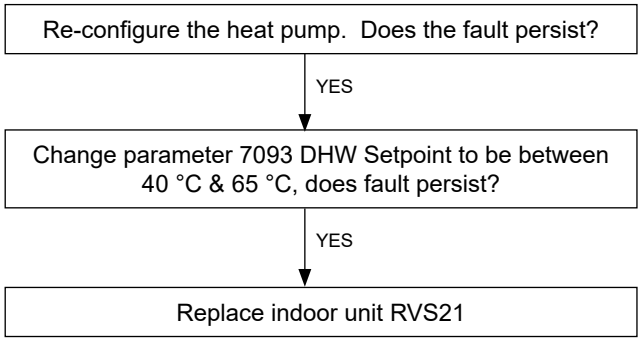

9.1.18 Anti-Legionella Temperature Fault

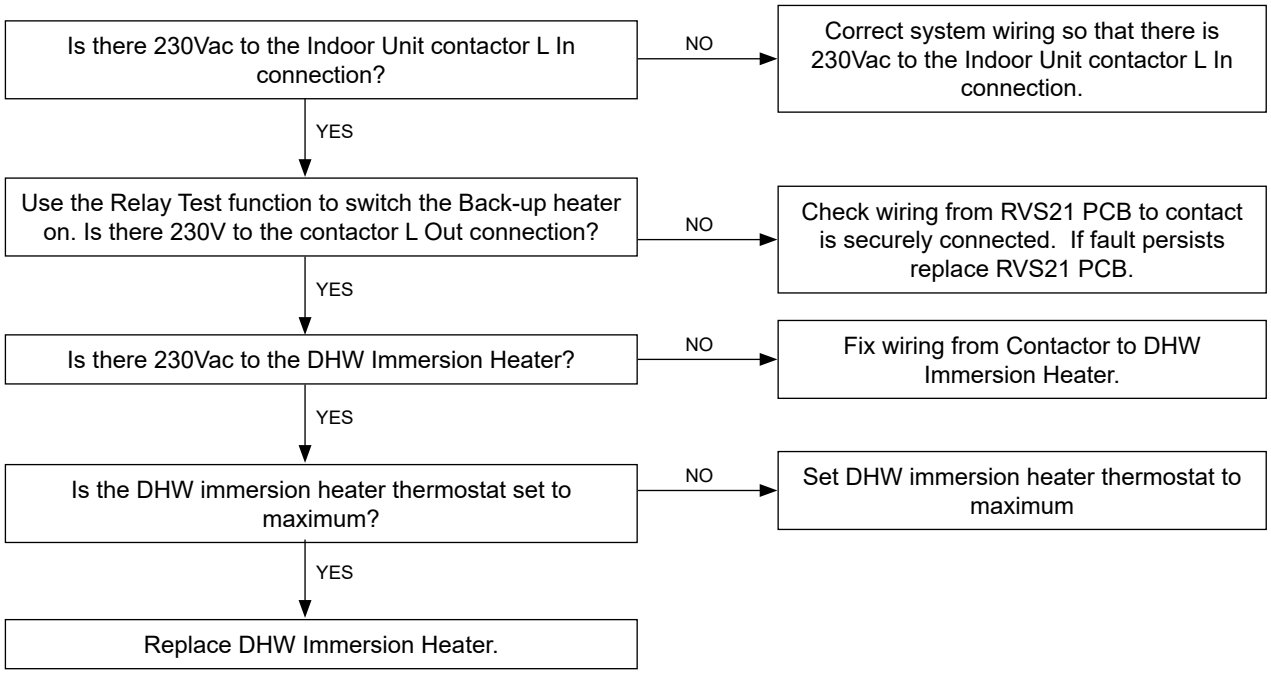

9.1.19 Re-occurring Heat Pump Fault

Check fault history for which Heat Pump fault is occurring and consult Fault Help for that fault. The Blocking Error will clear in 8 minutes

9.1.20 Configuration Fault

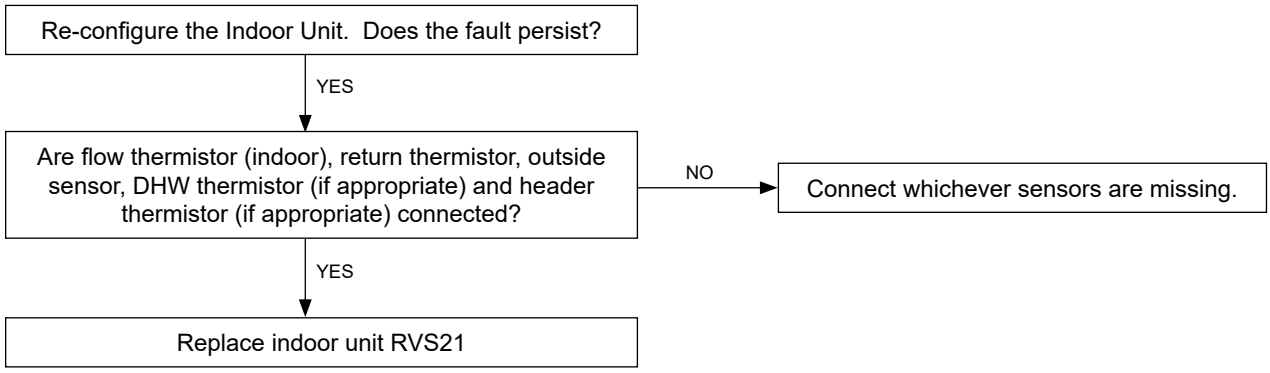

9.1.21 Alarm Contact 1 Active Fault

Check fault history for which fault is occurring and consult Fault Help for that fault.

9.1.22 Room Temperature Sensor Fault

Replace batteries in Halo Thermostat.
Does fault persist?

YES ↓

Replace Halo Thermostat(s) and Smart Interface. Does fault persist?

YES ↓

Replace Indoor Unit RVS21 PCB.

9.1.23 External Fault

Device connected to External Fault input EX1 is in a fault condition. Rectify external fault.

9.1.24 Low Mains Voltage Fault

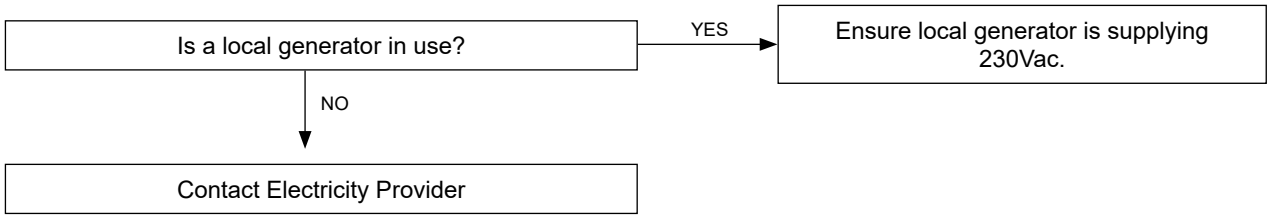

9.1.25 No Cascade Master Fault

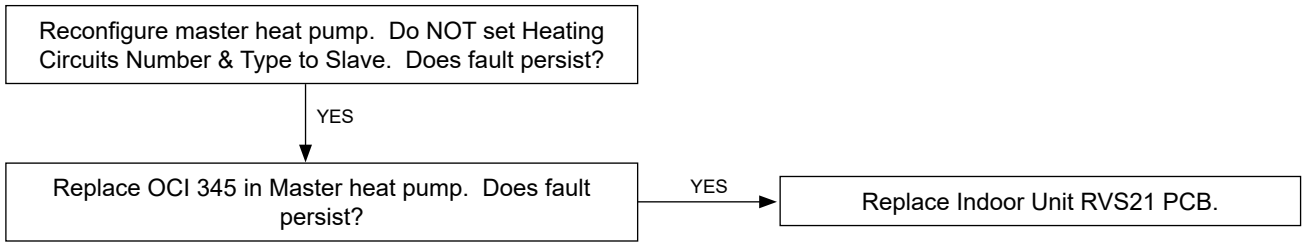

9.1.26 No Outdoor Connection Fault

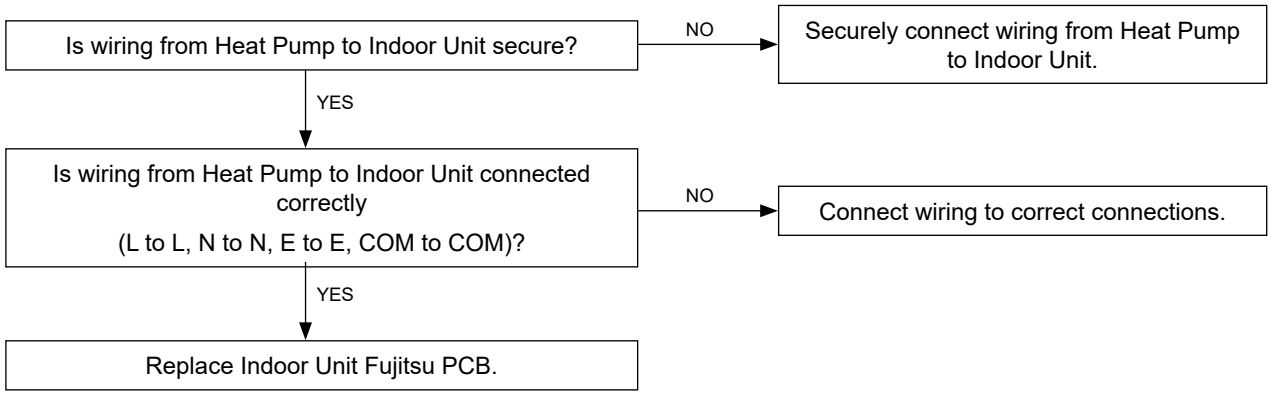

9.1.27 Back-up Boiler no Temperature Rise Fault

Check if Back-up boiler is at a fault condition.

9.1.28 Number of Heat Pump Starts Exceeded

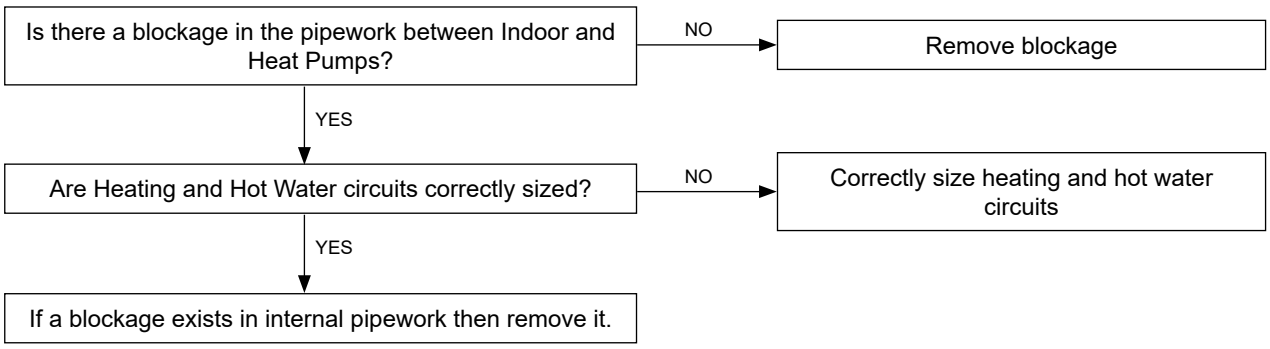

9.1.29 No Central Heating but Hot Water works OK

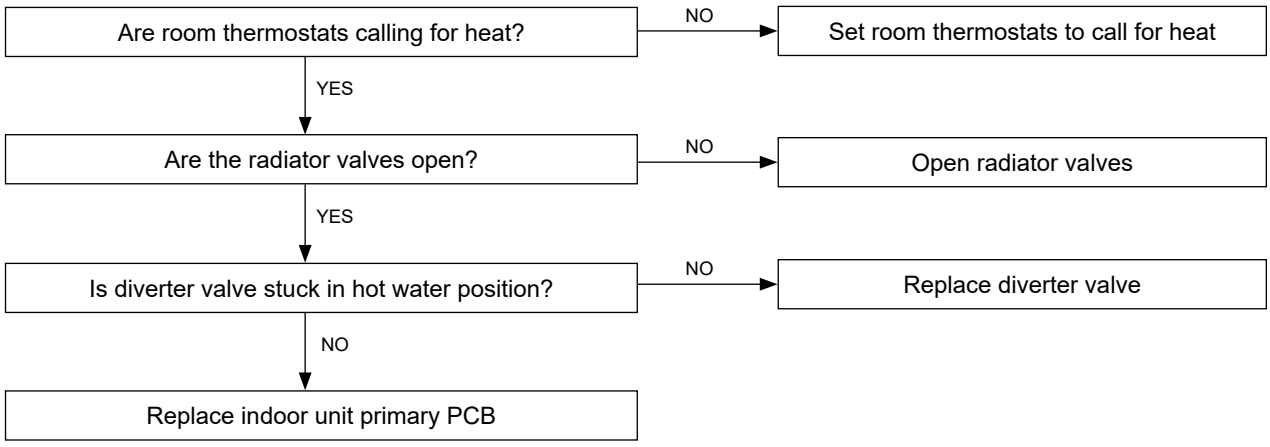

9.1.30 No Hot Water but Central Heating works OK

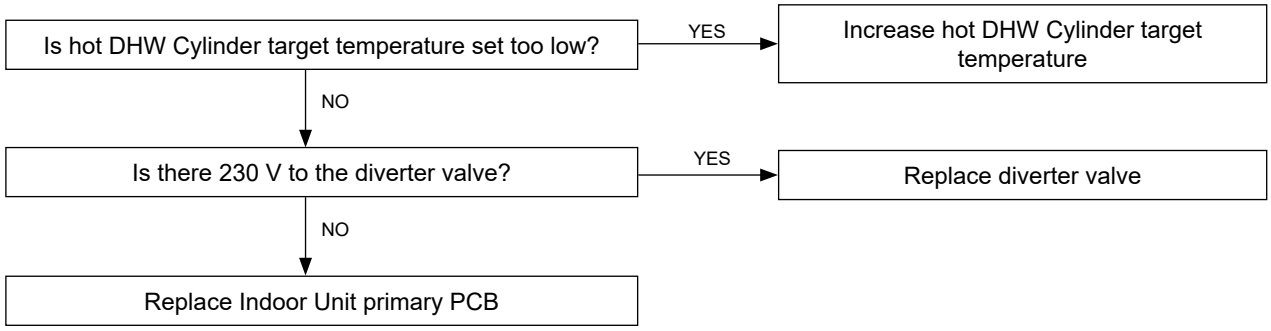

9.1.31 No Display on Indoor Unit

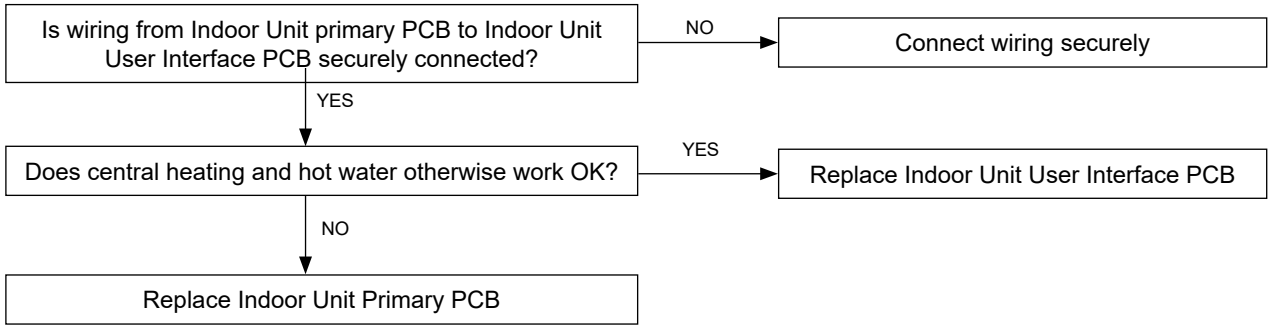

1.1 SYSTEM SCHEMATICS

1.1.1 Schematics Key/Legend

1. LEGEND

- CH WATER FLOW PIPEWORK
- CH WATER RETURN PIPEWORK
- DHW HOT WATER OUTLET PIPEWORK
- DHW COLD WATER INLET PIPEWORK
- SYSTEM BOUNDARY

COMPONENT SYMBOLS

- GATE VALVE
- BALL VALVE
- CHECK VALVE
- DOUBLE CHECK VALVE
- AUTOMATIC AIR VENT
- PRESSURE RELIEF VALVE
- PRESSURE REDUCING VALVE
- AUTOMATIC BY–PASS VALVE
- ANTI–FREEZE VALVE
- 2 WAY VALVE
- 3 WAY VALVE
- CIRCULATING PUMP
- FLEXIBLE HOSE
- IMMERSION HEATER
- PLATE HEAT EXCHANGER
- PIPE INSULATION
- MF — MAGNETIC FILTER
- STRAINER
- REDUCER
- FLOW BALANCING VALVE WITH WATER FLOW INDICATOR (10 – 50 l/min)

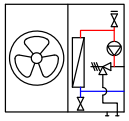
MONOBLOCK HEAT PUMP

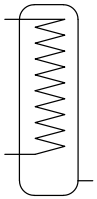
INDIRECT DHW CYLINDER

HEAT EMITTER

EXPANSION VESSEL

VOLUMISER

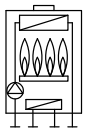
COMBINATION BOILER

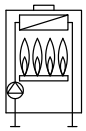
SYSTEM BOILER

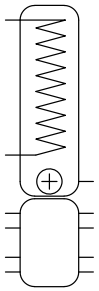
INDIRECT DHW CYLINDER WITH INTEGRATED BUFFER TANK

MULTI CONNECTION BUFFER TANK

MULTI CONNECTION HYDRAULIC SEPARATOR

HYDRAULIC SEPARATOR

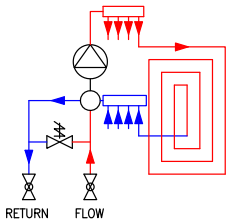

UNDERFLOOR HEATING CIRCUIT

INSTRUMENT ABBREVIATIONS
(LOGIC AIR CONTROL BOX CONNECTIONS)

- FT — FLOW THERMISTOR
- RT — RETURN THERMISTOR
- HT — HEADER THERMISTOR
- DT — DHW THERMISTOR
- ZT1 — ZONE 1 ON/OFF THERMOSTAT
- ZT2 — ZONE 2 ON/OFF THERMOSTAT
- HAI — HALO AIR INTERFACE
- OH — OVERHEAT THERMOSTAT
- ZP1 — HEATING ZONE PUMP 1
- ZP2 — HEATING ZONE PUMP 2
- IM — IMMERSION HEATER
- DP — DHW PUMP
- 3WV — 3 WAY VALVE
- 2WV — 2 WAY VALVE
- BLR — GAS BOILER

Refer to Logic Air monobloc heat pump system installation and maintenance manual in conjunction with these schematic drawings.

1.1.2 Logic Air + Two Zone Pre-Plumbed Cylinder with Integrated Buffer

CONNECTION POINT LIST

TP No	DESCRIPTION	SIZE	MATERIAL	TYPE
1	HEAT PUMP FLOW	1" BSP	BRASS	BSP MALE
2	HEAT PUMP RETURN	1" BSP	BRASS	BSP MALE
3	HEAT PUMP CONDENSATE DISPOSAL	–	–	–
4	PRESSURE RELIEF VALVE (PRV)	15MM	COPPER	COPPER PIPE OUTLET
5	CYLINDER HEAT PUMP FLOW	28MM	BRASS	COMPRESSION
6	CYLINDER HEAT PUMP RETURN	28MM	BRASS	COMPRESSION
7	ZONE 1 FLOW	28MM	BRASS	COMPRESSION
8	ZONE 1 RETURN	28MM	BRASS	COMPRESSION
9	ZONE 2 FLOW	28MM	BRASS	COMPRESSION
10	ZONE 2 RETURN	28MM	BRASS	COMPRESSION

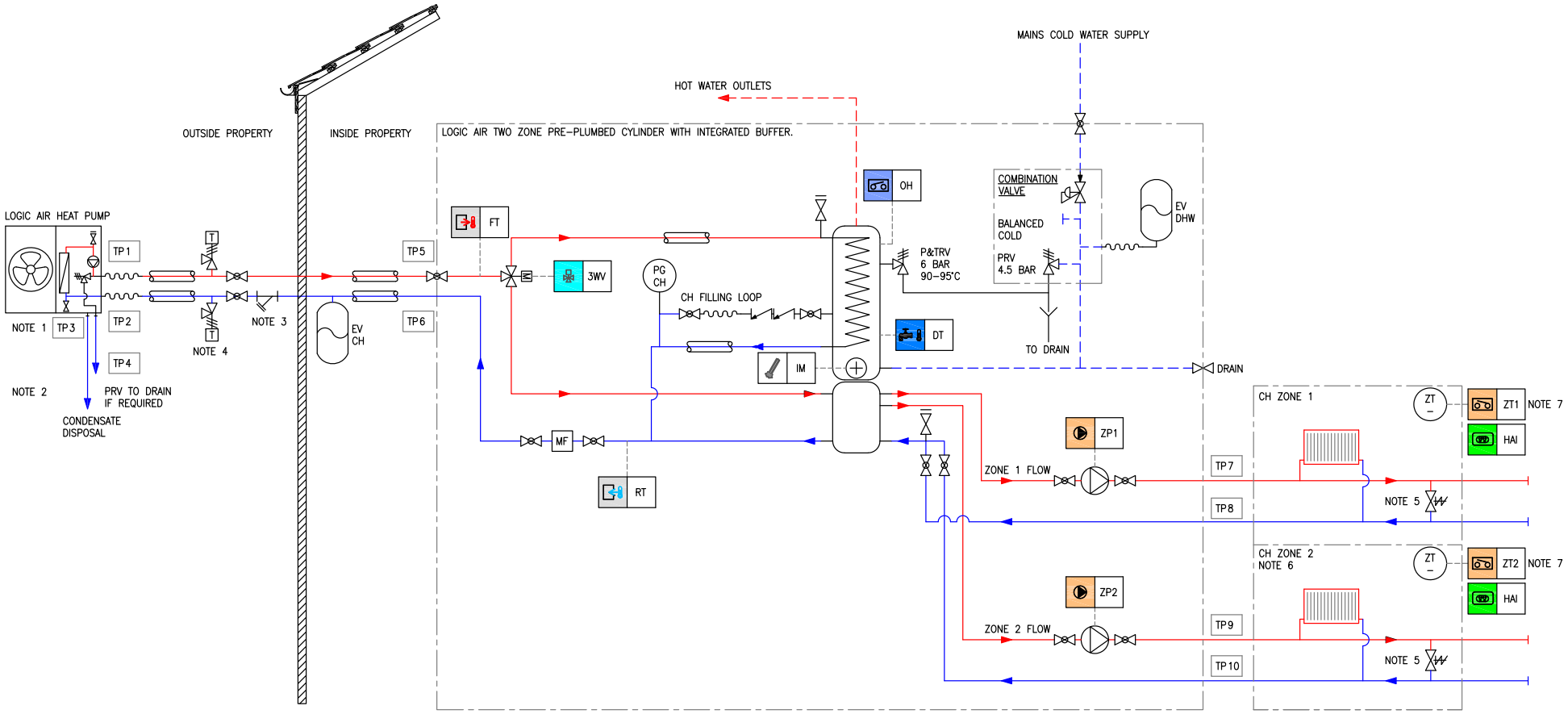

Notes.

Note 1. The heat pump must be installed on a secure level base capable of supporting its weight.
Note 2. Refer to the installation manual for condensate and pressure relief discharge requirements.
Note 3. A particulate filter is available as an accessory and it is recommended to install a magnetic filter. When installing an Ideal Pre-plumbed cylinder, these components are pre-installed and therefore no additional filters are required.
Note 4. Refer to the installation manual for anti-freeze recommendations.
Note 5. Install an auto-bypass if no permanent open circuit is available to allow secondary side pump overrun and normal operation.
Note 6. Logic Air single zone pre-plumbed arrangement is available.
Note 7. Refer to the installation manual for smart or ON/OFF thermostat connection.
Note 8. Free volume must be considered as any part of the un-valved system volume (excluding the zone 2 space heating circuit) with sections of pipework and radiators without thermostatic radiator valves.
Note 9. Underfloor heating circuit option. Refer to the manufacturers installation instructions for pump and bypass requirements.

This drawing is for information and guidance only. It is the heating designer/ installers responsibility to adhere to the latest relevant standards.

Refer to Logic Air monobloc heat pump system installation and maintenance manual in conjunction with these schematic drawings.

1.1.3 Logic Air + Single Zone Pre-Plumbed Cylinder

CONNECTION POINT LIST				
TP No	DESCRIPTION	SIZE	MATERIAL	TYPE
1	HEAT PUMP FLOW	1" BSP	BRASS	BSP MALE
2	HEAT PUMP RETURN	1" BSP	BRASS	BSP MALE
3	HEAT PUMP CONDENSATE DISPOSAL	–	–	–
4	PRESSURE RELIEF VALVE (PRV)	15MM	COPPER	COPPER PIPE OUTLET
5	CYLINDER HEAT PUMP FLOW	28MM	BRASS	COMPRESSION
6	CYLINDER HEAT PUMP RETURN	28MM	BRASS	COMPRESSION
7	ZONE 1 FLOW	28MM	BRASS	COMPRESSION
8	ZONE 1 RETURN	28MM	BRASS	COMPRESSION

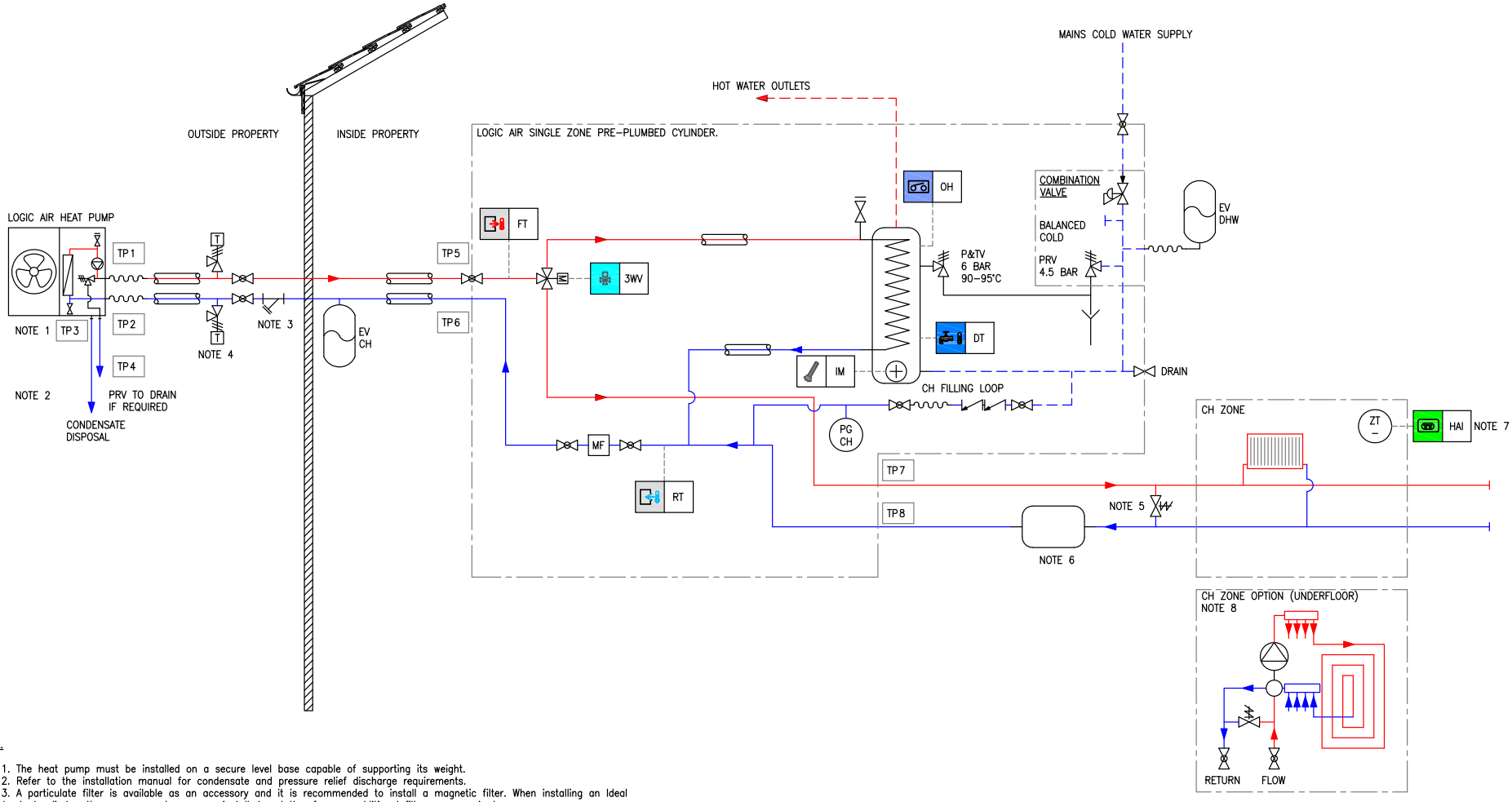

Notes.

Note 1. The heat pump must be installed on a secure level base capable of supporting its weight.
Note 2. Refer to the installation manual for condensate and pressure relief discharge requirements.
Note 3. A particulate filter is available as an accessory and it is recommended to install a magnetic filter. When installing an Ideal Pre-plumbed cylinder, these components are pre-installed and therefore no additional filters are required.
Note 4. Refer to the installation manual for anti-freeze recommendations.
Note 5. Install an auto-bypass if no permanent open circuit is available to allow primary side pump overrun and normal operation. Ensuring minimum circulating water flow rate for heat pump defrost requirements.
Note 6. If minimum free system water volume cannot be met, a volumiser is required.
Note 7. Refer to the installation manual for smart thermostat connection.
Note 8. Underfloor heating circuit option. Refer to the manufacturers installation instructions for pump and bypass requirements.

This drawing is for information and guidance only. It is the heating designer/installers responsibility to adhere to the latest relevant standards.

Refer to Logic Air monobloc heat pump system installation and maintenance manual in conjunction with these schematic drawings.

1.1.4 Logic Air + Two Zone Pre-plumbed Cylinder with Integrated Low Loss Header

CONNECTION POINT LIST				
TP No	DESCRIPTION	SIZE	MATERIAL	TYPE
1	HEAT PUMP FLOW	1" BSP	BRASS	BSP MALE
2	HEAT PUMP RETURN	1" BSP	BRASS	BSP MALE
3	HEAT PUMP CONDENSATE DISPOSAL	–	–	–
4	PRESSURE RELIEF VALVE (PRV)	15MM	COPPER	COPPER PIPE OUTLET
5	CYLINDER HEAT PUMP FLOW	28MM	BRASS	COMPRESSION
6	CYLINDER HEAT PUMP RETURN	28MM	BRASS	COMPRESSION
7	ZONE 1 FLOW	28MM	BRASS	COMPRESSION
8	ZONE 1 RETURN	28MM	BRASS	COMPRESSION
9	ZONE 2 FLOW	28MM	BRASS	COMPRESSION
10	ZONE 2 RETURN	28MM	BRASS	COMPRESSION

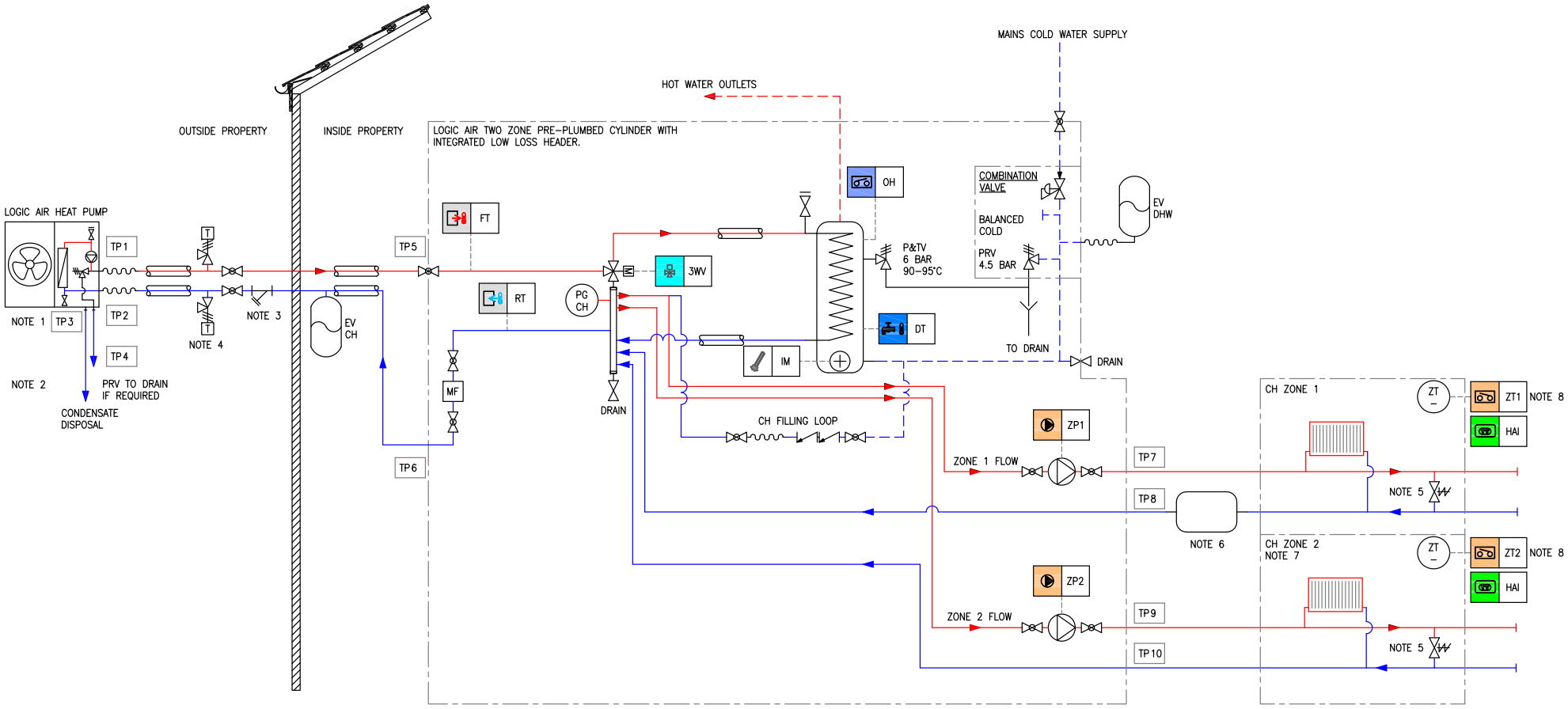

Notes.

Note 1. The heat pump must be installed on a secure level base capable of supporting its weight.
Note 2. Refer to the installation manual for condensate and pressure relief discharge requirements.
Note 3. A particulate filter is available as an accessory and it is recommended to install a magnetic filter. When installing an Ideal Pre-plumbed cylinder, these components are pre-installed and therefore no additional filters are required.
Note 4. Refer to the installation manual for anti-freeze recommendations.
Note 5. Install an auto-bypass if no permanent open circuit is available to allow secondary side pump overrun and normal operation.
Note 6. If minimum free system water volume cannot be met, a volumiser is required.
Note 7. Logic Air single zone pre-plumbed arrangement is available.
Note 8. Refer to the installation manual for smart or ON/OFF thermostat connection.
Note 9. Free volume must be considered as any part of the un-valved system volume (excluding the zone 2 space heating circuit) with sections of pipework and radiators without thermostatic radiator valves.
Note 10. Underfloor heating circuit option. Refer to the manufacturers installation instructions for pump and bypass requirements.

This drawing is for information and guidance only. It is the heating designer/installers responsibility to adhere to the latest relevant standards.

Refer to Logic Air monobloc heat pump system installation and maintenance manual in conjunction with these schematic drawings.

1.1.5 Pump Pressure Curves

Glycol has a higher viscosity than water. If admixtures of glycol are used, the pumping data of the circulation pump must be corrected to match the mixing ratio.

1.1.5.1 Heat Pump Remaining Pump Head (after appliance losses)

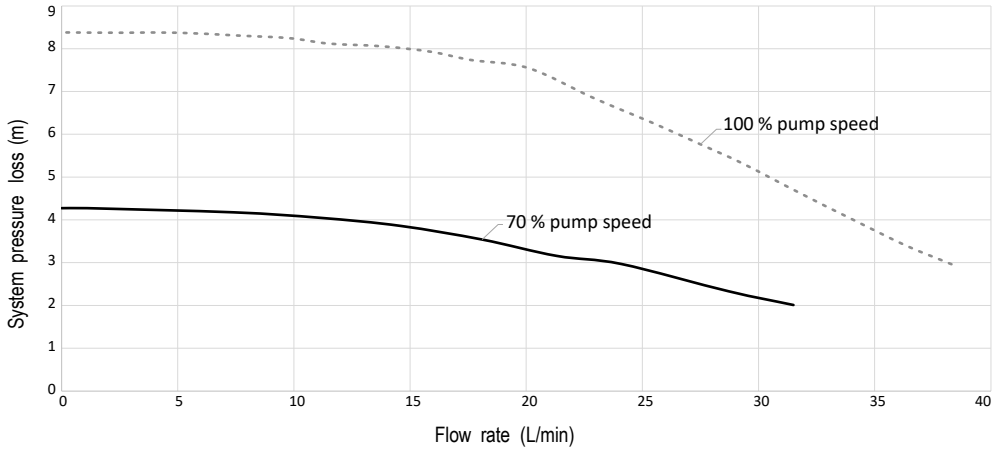

Heat Pump Model	Units	4 kW	5 kW	8 kW	10 kW
Design flow rate	l/m	11.47	14.33	22.93	28.67
Remaining Pump head (after appliance losses)	m	8.1	7.9	6.8	5.4

Note: The default pump settings are 70% for the 4 &5 kW and 100% for the 8 & 10kW. Adjustment will be required to achieve the correct design flow.

1.1.5.2 Ideal Heat Pump Magnetic Filter and Strainer Losses (Logic Air Pre-Plumbed Cylinders)

Heat Pump Model	Units	4 kW	5 kW	8 kW	10 kW
Design flow rate	l/m	11.47	14.33	22.93	28.67
Ideal Heat Pump Magnetic Filter and Strain losses	m	0.09	0.11	0.28	0.41

1.1.5.3 Central Heating Zone Pump Curves (Logic Air Pre-Plumbed Cylinders)

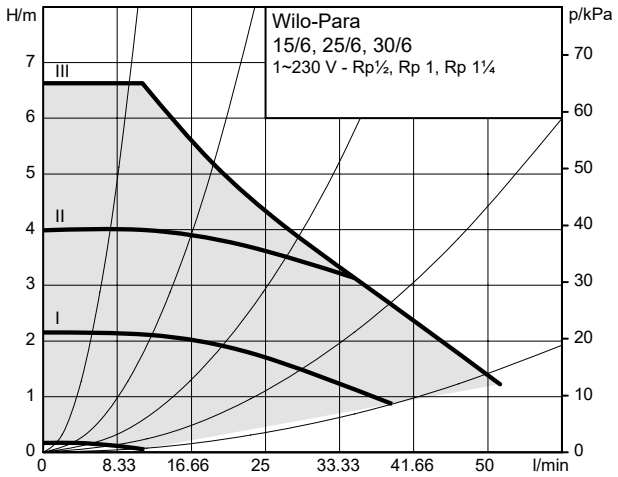

1.1.6 Refrigerant Circuit

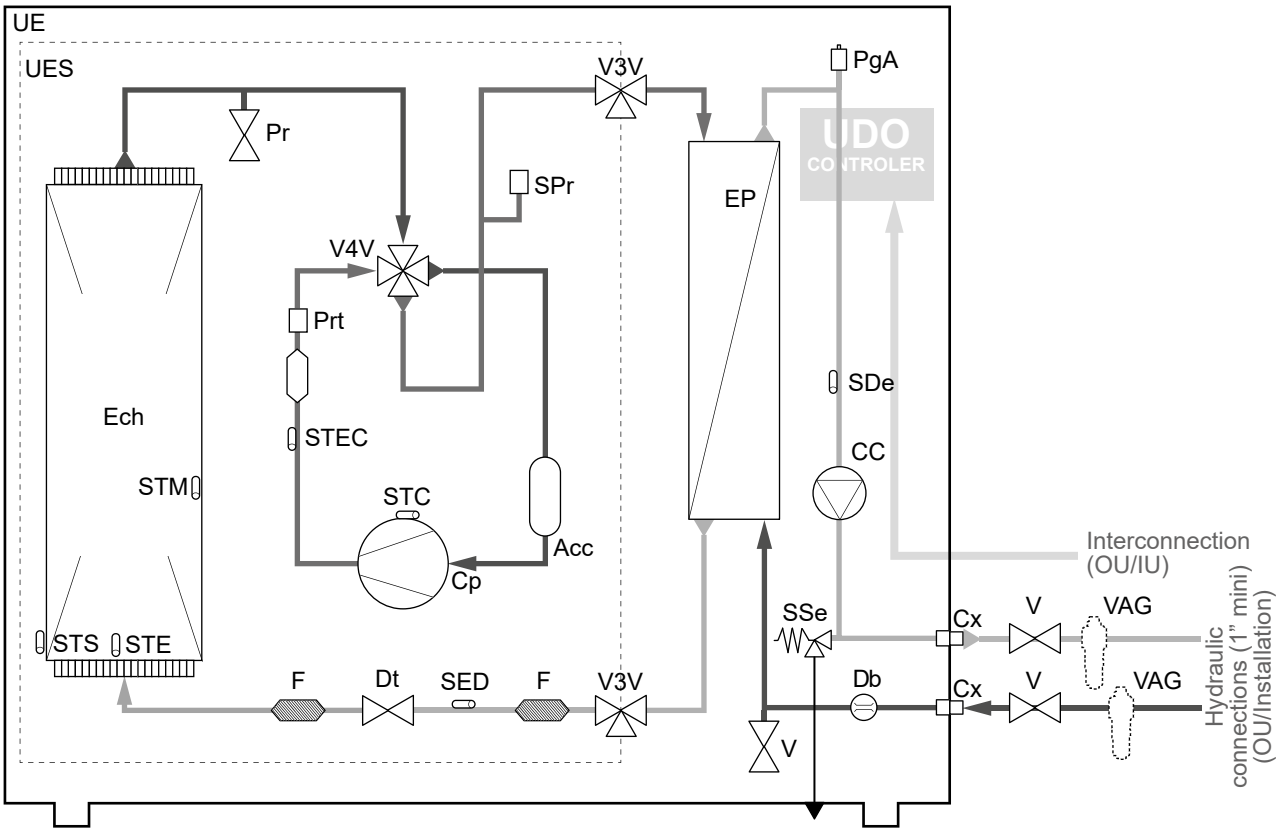

Figure 47. Refrigerant Circuit Diagram

Acc	Accumulator	Pr	Pressure valve	STEC	Discharge temp. sensor
CC	HP circulation pump IPWM	Prt	Pressure switch	STM	Middle heat exchanger temp sensor
Cp	Compressor	SDe	Flow temperature sensor	STS	Outlet heat exchanger temp. sensor
Cx	Hydraulic connection 1"	SED	Inlet expansion valve temp. sensor	UE	Heat Pump
Db	Flow-meter	SPr	Pressure sensor	UES	Refrigerant unit
Dt	Expansion valve	SR	Heating return sensor	V	Valve
Ech	Air to Refrigerant Heat Exchanger	SSa	DHW temp. sensor	V3V	3 ways valve
EP	Refrigerant to Water Heat Exchanger	SSe	Pressure relief valve	V4V	4-way valve
F	Filter	STC	Compressor temp. sensor	VAG	Antifreeze valve
PgA	Automatic bleeder valve	STE	Outdoor temp sensor		

The Benchmark for installers app is available to download from the App Store or Google Play Store or can be completed online

Download on the App Store | GET IT ON Google Play | Complete Benchmark Online

SCAN for link

Benchmark Commissioning & Warranty Validation Service Record

It is a requirement that the heat pump is installed and commissioned to the manufacturers' instructions and the data fields on the commissioning checklist completed in full.

To instigate the warranty the heat pump needs to be registered with the manufacturer within one month of the installation. The warranty rests with the end-user (consumer), and they should be made aware it is ultimately their responsibility to register with the manufacturer, within the allotted time period.

It is essential that the heat pump is serviced in line with the manufacturers' recommendations, at least annually. This must be carried out by a competent, certified operative. The service details should be recorded on the Benchmark Service and Interim Heat Pump Work Record and left with the householder. Failure to comply with the manufacturers' servicing instructions and requirements will invalidate the warranty.

benchmark COLLECTIVE MARK

THE MARK OF QUALITY FOR THE INSTALLATION, COMMISSIONING AND SERVICING OF DOMESTIC HEATING AND HOT WATER SYSTEMS

www.hhic.co.uk

This Commissioning Checklist is to be completed in full by the competent person who commissioned the heat pump and associated equipment as a means of demonstrating compliance with the appropriate Building Regulations and then handed to the customer to keep for future reference.

Failure to install and commission according to the manufacturers' instructions and complete this Benchmark Commissioning Checklist will invalidate the warranty. This does not affect the customer's statutory rights.

* All installations in England and Wales must be notified to Local Authority Building Control (LABC) either directly or through a Competent Persons Scheme. A Building Regulations Compliance Certificate will then be issued to the customer.

© Heating and Hotwater Industry Council (HHIC)

benchmark COLLECTIVE MARK THE MARK OF QUALITY FOR THE INSTALLATION, COMMISSIONING AND SERVICING OF DOMESTIC HEATING AND HOT WATER SYSTEMS

www.hhic.org.uk
Issue date: 20.08.2020

AIR TO WATER HEAT PUMP COMMISSIONING CHECKLIST

Address:				
Heat Pump make and model:				
Heat Pump serial number:				
Commissioned by (PRINT NAME):			Certified Operative Reg number (1):	
Company name:			Telephone number:	
Company email:			Company address:	
			Commissioning date:	
Heating and hot water system complies with the appropriate Building Regulations?				Yes
DNO notification?				Yes
Building Regulations Notification Number (if applicable) (2)				
MCS installer registration Number (if applicable)			MCS product certification number (if applicable)	
F-gas certification number (split heat pump only)				
G3 certification number (if applicable)				
Heat Pump Type (Tick)	Split	Monoblock	Peak heat loss of building kW	
Is Heat Pump Installed as part of a cascade?	Yes		Cascade Heat Pump Series	( ) of ( )
Heat Pump Refrigerant Type			Refrigerant weight (total)	kg

Electrical and Hydronic Controls – SYSTEM AND HEAT PUMP (Tick the appropriate boxes)				
Time and temperature control to heating	Room thermostat and programmer/timer		Programmable Roomstat	
	Load/weather compensation		Optimum start control	
Time and temperature control to hot water	Cylinder thermostat and programmer/timer		Combined with Heat pump main controls	
Hybrid system – synchronised control of boiler and heat pump fitted			Yes	
If Yes – boiler model switching point – (Quote Tariff or Temperature Level)				

Heating zone valves (including underfloor loops)	pre-existing		Fitted		Not required	
Hot water zone valves	pre-existing		Fitted		Not required	
Thermostatic radiator valves	pre-existing		Fitted		Not required	
Outdoor Sensor	pre-existing		Fitted		Not required	
Heat Pump Safety Interlock (3)	pre-existing		Fitted		Not required	
Automatic bypass to system	pre-existing		Fitted		Not required	

Buffer Vessel Fitted	Yes		No		If yes volume:		Litres	
Plate Heat Exchanger fitted to give hydronic separation of the heat pump circuit to the heating circuit						Yes	No	
Expansion vessel for heating is sized, fitted & charged in accordance with manufacturer's instructions							Yes	
Legionella protection for stored hot water provided by timed temperature control?							Yes	

Water Treatment – SYSTEM AND HEAT PUMP (Tick the appropriate boxes/Measure and Record)						
System has been cleaned and treated in accordance with BS 7593:2019 and heat pump manufacturers' instructions?					Yes	
What system cleaner was used?	Brand:		Product:			
What heating system inhibitor was used?	Brand:		Product:			
What heat pump system anti-freeze/inhibitor was used? (monoblock only)	Brand:		Product:		% concentration	
System filter fitted in accordance with BS7593 : 2019?					Yes	

Heat Pump outdoor unit (Tick the appropriate boxes/Measure and Record)		
Is the heating system adequately frost protected and pipes insulated to prevent heat loss?	Yes	
Split only: The refrigerant circuit has been evacuated and charged in accordance with manufacturer's instructions	Yes	
The heat pump is fitted on a solid/stable surface capable of taking its weight	Yes	
The necessary heat pump defrost provision been put in place	Yes	
The heat pump fan free from obstacles and operational	Yes	
Condensate drain installed to manufacturer's instructions	Yes	

CENTRAL HEATING MODE (Tick the appropriate boxes/Measure and Record)					
The heating system has been filled and pressure tested				Yes	
Heating Flow Temperature		°C	Heating Return Temperature		°C
System correctly balance/rebalanced				Yes	

DOMESTIC HOT WATER MODE (Tick the appropriate boxes)									
Is the heat pump connected to a hot water cylinder?		Unvented		Vented		Thermal Store		Not connected	
Hot water cylinder size		Litres	Stored hot water temperature						°C
Hot water has been checked at all outlets		Yes	Have Thermostatic Blending Valves been fitted?			Yes		Not required	

* All installations in England and Wales must be notified to Local Authority Building Control (LABC) either directly or through a Competent Persons Scheme. A Building Regulations Compliance Certificate will then be issued to the customer.

© Heating and Hotwater Industry Council (HHIC)

benchmark COLLECTIVE MARK
THE MARK OF QUALITY FOR THE INSTALLATION, COMMISSIONING AND SERVICING OF DOMESTIC HEATING AND HOT WATER SYSTEMS

www.hhic.org.uk
Issue date: 20.08.2020

Benchmark Checklist and Service Records

ADDITIONAL SYSTEM INFORMATON (Tick the appropriate boxes/Measure and Record)										
Water flow rate setting of the heat pump at commissioning (l/min):										
Additional heat sources connected:		Gas Boiler		Oil Boiler		Electric Heater		Solar Thermal		Other:

ALL INSTALLATIONS		
All electrical work complies with the appropriate Regulations	Yes	
The heat pump and associated products have been installed and commissioned in accordance with the manufacturer's instructions	Yes	
The operation of the heat pump and system controls have been demonstrated to and understood by the customer	Yes	
The manufacturer's literature, including Benchmark Checklist and Service Record, has been explained and left with the customer	Yes	
Commissioning Engineer's signature:		
Customer's signature (To confirm satisfactory demonstration and receipt of manufacturers' literature)		

* All installations in England and Wales must be notified to Local Authority Building Control (LABC) either directly or through a Competent Persons Scheme. A Building Regulations Compliance Certificate will then be issued to the customer.

© Heating and Hotwater Industry Council (HHIC)

www.hhic.org.uk
Issue date: 20.08.2020

Benchmark Checklist and Service Records

SERVICE RECORD

It is recommended that your heating system is serviced regularly and that the appropriate Service Interval Record is completed.

Service provider

Before completing the appropriate Service Record below, please ensure you have carried out the service as described in the manufacturer's instructions.

Always use the manufacturer's specified spare part when replacing controls.

*A System inhibitor efficacy test is required on every annual service in accordance with the manufacturers' instructions and BS 7593. It is only acceptable to not have undertaken this if the service engineers attendance visit was in between annual services to attend a non-water facing component.

SERVICE 01	Date:	
Engineer name:		
Company name:		
Telephone No:		
Operative ID No:		
System inhibitor concentration has been checked and appropriate action taken, in accordance with BS 7593 and heat pump manufacturers' instructions. *	Yes	N/a
Comments:		
Signature:		

SERVICE 01	Date:	
Engineer name:		
Company name:		
Telephone No:		
Operative ID No:		
System inhibitor concentration has been checked and appropriate action taken, in accordance with BS 7593 and heat pump manufacturers' instructions. *	Yes	N/a
Comments:		
Signature:		

SERVICE 01	Date:	
Engineer name:		
Company name:		
Telephone No:		
Operative ID No:		
System inhibitor concentration has been checked and appropriate action taken, in accordance with BS 7593 and heat pump manufacturers' instructions. *	Yes	N/a
Comments:		
Signature:		

SERVICE 01	Date:	
Engineer name:		
Company name:		
Telephone No:		
Operative ID No:		
System inhibitor concentration has been checked and appropriate action taken, in accordance with BS 7593 and heat pump manufacturers' instructions. *	Yes	N/a
Comments:		
Signature:		

SERVICE 01	Date:	
Engineer name:		
Company name:		
Telephone No:		
Operative ID No:		
System inhibitor concentration has been checked and appropriate action taken, in accordance with BS 7593 and heat pump manufacturers' instructions. *	Yes	N/a
Comments:		
Signature:		

SERVICE 01	Date:	
Engineer name:		
Company name:		
Telephone No:		
Operative ID No:		
System inhibitor concentration has been checked and appropriate action taken, in accordance with BS 7593 and heat pump manufacturers' instructions. *	Yes	N/a
Comments:		
Signature:		

* All installations in England and Wales must be notified to Local Authority Building Control (LABC) either directly or through a Competent Persons Scheme. A Building Regulations Compliance Certificate will then be issued to the customer.

© Heating and Hotwater Industry Council (HHIC)

benchmark COLLECTIVE MARK
THE MARK OF QUALITY FOR THE INSTALLATION, COMMISSIONING AND SERVICING OF DOMESTIC HEATING AND HOT WATER SYSTEMS

www.hhic.org.uk
Issue date: 20.08.2020

SERVICE RECORD

It is recommended that your heating system is serviced regularly and that the appropriate Service Interval Record is completed.

Service provider

Before completing the appropriate Service Record below, please ensure you have carried out the service as described in the manufacturer's instructions.

Always use the manufacturer's specified spare part when replacing controls.

*A System inhibitor efficacy test is required on every annual service in accordance with the manufacturers' instructions and BS 7593. It is only acceptable to not have undertaken this if the service engineers attendance visit was in between annual services to attend a non-water facing component.

SERVICE 01	Date:	
Engineer name:		
Company name:		
Telephone No:		
Operative ID No:		
System inhibitor concentration has been checked and appropriate action taken, in accordance with BS 7593 and heat pump manufacturers' instructions. *	Yes	N/a
Comments:		
Signature:		

SERVICE 01	Date:	
Engineer name:		
Company name:		
Telephone No:		
Operative ID No:		
System inhibitor concentration has been checked and appropriate action taken, in accordance with BS 7593 and heat pump manufacturers' instructions. *	Yes	N/a
Comments:		
Signature:		

SERVICE 01	Date:	
Engineer name:		
Company name:		
Telephone No:		
Operative ID No:		
System inhibitor concentration has been checked and appropriate action taken, in accordance with BS 7593 and heat pump manufacturers' instructions. *	Yes	N/a
Comments:		
Signature:		

SERVICE 01	Date:	
Engineer name:		
Company name:		
Telephone No:		
Operative ID No:		
System inhibitor concentration has been checked and appropriate action taken, in accordance with BS 7593 and heat pump manufacturers' instructions. *	Yes	N/a
Comments:		
Signature:		

* All installations in England and Wales must be notified to Local Authority Building Control (LABC) either directly or through a Competent Persons Scheme. A Building Regulations Compliance Certificate will then be issued to the customer.

© Heating and Hotwater Industry Council (HHIC)

www.hhic.org.uk
Issue date: 20.08.2020

MAINS PRESSURE HOT WATER STORAGE SYSTEM COMMISSIONING CHECKLIST

This Commissioning Checklist is to be completed in full by the competent person who commissioned the storage system as a means of demonstrating compliance with the appropriate Building Regulations and then handed to the customer to keep for future reference.

Failure to install and commission this equipment to the manufacturer's instructions may invalidate the warranty but does not affect statutory rights.

Customer name:	Telephone number:
Address:	
Cylinder Make and Model	
Cylinder Serial Number	
Commissioned by (PRINT NAME):	Registered Operative ID Number
Company name:	Telephone number:
Company address:	
	Commissioning date:
To be completed by the customer on receipt of a Building Regulations Compliance Certificate*:	
Building Regulations Notification Number (if applicable)	

ALL SYSTEMS PRIMARY SETTINGS (indirect heating only)				
Is the primary circuit a sealed or open vented system?	Sealed		Open	
What is the maximum primary flow temperature?				°C

ALL SYSTEMS				
What is the incoming static cold water pressure at the inlet to the system?			bar	
Has a strainer been cleaned of installation debris (if fitted)?	Yes		No	
Is the installation in a hard water area (above 200ppm)?	Yes		No	
If yes, has a water scale reducer been fitted?	Yes		No	
What type of scale reducer has been fitted?				
What is the hot water thermostat set temperature?			°C	
What is the maximum hot water flow rate at set thermostat temperature (measured at high flow outlet)?			l/min	
Time and temperature controls have been fitted in compliance with Part L of the Building Regulations?			Yes	
Type of control system (if applicable)	Y Plan	S Plan	Other	
Is the cylinder solar (or other renewable) compatible?	Yes		No	
What is the hot water temperature at the nearest outlet?			°C	
All appropriate pipes have been insulated up to 1 metre or the point where they become concealed			Yes	

UNVENTED SYSTEMS ONLY				
Where is the pressure reducing valve situated (if fitted)?				
What is the pressure reducing valve setting?			bar	
Has a combined temperature and pressure relief valve and expansion valve been fitted and discharge tested?	Yes		No	
The tundish and discharge pipework have been connected and terminated to Part G of the Building Regulations			Yes	
Are all energy sources fitted with a cut out device?	Yes		No	
Has the expansion vessel or internal air space been checked?	Yes		No	

THERMAL STORES ONLY		
What store temperature is achievable?		°C
What is the maximum hot water temperature?		°C

ALL INSTALLATIONS		
The hot water system complies with the appropriate Building Regulations	Yes	
The system has been installed and commissioned in accordance with the manufacturer's instructions	Yes	
The system controls have been demonstrated to and understood by the customer	Yes	
The manufacturer's literature, including Benchmark Checklist and Service Record, has been explained and left with the customer	Yes	

Commissioning Engineer's Signature
Customer's Signature
(To confirm satisfactory demonstration and receipt of manufacturer's literature)

*All installations in England and Wales must be notified to Local Authority Building Control (LABC) either directly or through a Competent Persons Scheme. A Building Regulations Compliance Certificate will then be issued to the customer.

benchmark COLLECTIVE MARK
THE MARK OF QUALITY FOR THE INSTALLATION, COMMISSIONING AND SERVICING OF DOMESTIC HEATING AND HOT WATER SYSTEMS

© Heating and Hotwater Industry Council (HHIC)

www.centralheating.co.uk

While this Checklist can be used for any installation covered by its description, only appliances manufactured by Scheme Members will be covered by the rules and requirements of the Benchmark Scheme.

SERVICE RECORD

It is recommended that your hot water system is serviced regularly and that the appropriate Service Record is completed.

Service Provider

Before completing the appropriate Service Record below, please ensure you have carried out the service as described in the manufacturer's instructions.

SERVICE 01	Date:
Engineer name:	
Company name:	
Telephone No:	
Comments:	
Signature	

SERVICE 02	Date:
Engineer name:	
Company name:	
Telephone No:	
Comments:	
Signature	

SERVICE 03	Date:
Engineer name:	
Company name:	
Telephone No:	
Comments:	
Signature	

SERVICE 04	Date:
Engineer name:	
Company name:	
Telephone No:	
Comments:	
Signature	

SERVICE 05	Date:
Engineer name:	
Company name:	
Telephone No:	
Comments:	
Signature	

SERVICE 06	Date:
Engineer name:	
Company name:	
Telephone No:	
Comments:	
Signature	

SERVICE 07	Date:
Engineer name:	
Company name:	
Telephone No:	
Comments:	
Signature	

SERVICE 08	Date:
Engineer name:	
Company name:	
Telephone No:	
Comments:	
Signature	

SERVICE 09	Date:
Engineer name:	
Company name:	
Telephone No:	
Comments:	
Signature	

SERVICE 10	Date:
Engineer name:	
Company name:	
Telephone No:	
Comments:	
Signature	

HANDOVER TO END USER

It must be made sure that the following information has been explained and understood by the end user to prevent unnecessary call outs and customer dissatisfaction.

	Communicated?
Operating Principle of the System. The Heat Pump contains a closed refrigerant circuit. When operating, refrigerants circulated around the circuit absorbing heat from the ambient air and depositing it into the system water. The air intake and out-take are to be explained to the end user and the importance of not obstructing either side should be expressed. Explain the location and function of the safety devices installed in the system.	
User Controls. The operation principle of the specific installation is to be explained to the user, in particular the operation of the heating thermostat and how to operate the user interface. If a heated floor circuit is installed, it is to be explained that these circuit have significant resistance to change and that any adjustments must be made in smaller steps to be effective. It should be demonstrated how to both check and maintain the water pressure of the heating circuits.	
Defrost. The Heat Pump will begin to collect frost across the air intake at lower outdoor temperatures. Periodically the Heat Pump will be required to do a defrost function which will produce steam. This is normal in operation and is not cause for concern. If there are any areas at risk of collecting frozen condensate, these should be pointed out to the end user.	
Antifreeze Function. The Heat Pump has an antifreeze function to protect itself from damage. It is important that the Heat Pump electrical supply is not switched off unless done by a qualified service engineer.	
Clearances. The Heat Pump must not be obstructed at any time. The minimum installation clearances must be upheld. Do not rest objects on the surface of the Heat Pump.	
Storage and Usage of Manual. It is important that the manuals are kept in a safe and secure place for personal reference and future use. The user manual is to be read by the end user and all hazards and warnings understood. The setting instructions in the user manual are to be read through and explained with the end user. Key differences from their previous system are to be explained such as setting of flow temperature. The end user should then be given the opportunity to ask any questions regarding the new system.	
Servicing and Maintenance. It is important that the system is regularly serviced and inspected as required by the SERVICING AND MAINTENANCE section to make sure that the system continues to operate optimally and extend the lifespan of the system. Servicing and maintenance of the Heat Pump must only be done by a competent authorised person.	
Disposal and Decommissioning. The Heat Pump contains R32 refrigerant. It is a legal requirement that disposal and decommissioning of the Heat Pump must only be done by a competent authorised person.	
Legal Responsibilities. End user must be made aware that it is a legal requirement from the F-Gas Directive that operators (or owners) are responsible for: • Organising regular maintenance on the Heat Pump. • Checking the soundness of the refrigerant circuit. • Repair any leaks immediately. All maintenance and repair activities on the refrigerant circuit must be documented in the USER/ MAINTENANCE MANUAL.	
Warranty Inform the householder of the warranty / registration found within the envelope pack and then the requirement to register it to receive the full benefit of the warranty	

At Ideal Heating we take our environmental impact seriously, therefore when installing any Ideal Heating product please make sure to dispose of any previous appliance in an environmentally conscious manner. Households can contact their local authority to find out how.
See https://www.gov.uk/managing-your-waste-an-overview for guidance on how to efficiently recycle your business waste.

Technical Training

Our Expert Academy offer a range of training options designed and delivered by our experts in heating.
For details please visit: expert-academy.co.uk

Ideal Boilers Ltd., pursues a policy of continuing improvement in the design and performance of its products.
The right is therefore reserved to vary specification without notice.

Ideal is a trademark of Ideal Boilers.

Registered Office

Ideal Boilers Ltd., National Avenue, Hull, East Yorkshire, HU5 4JB
Tel 01482 492251 Fax 01482 448858

Registration No. London 322 137

EU Authorised Representative:
Atlantic SFDT
44 Boulevard des Etats-Unis, 85 000 La Roche-Sur-Yon, France
+33 (0)2 51 44 34 34

Ideal Technical Helpline: 01482 498663
Ideal Consumer Helpline: 01482 498660
Ideal Parts: 01482 498665

idealheating.com

ROI Installer Helpline: 00353 (0)1 961 7700

service@idealenergy.ie

USER GUIDE

LOGIC AIR MONOBLOC HEAT PUMP SYSTEM

When replacing any part on this appliance, use only spare parts that you can be assured conform to the safety and performance specification that we require. Do not use reconditioned or copy parts that have not been clearly authorised by Ideal Heating.

For the very latest copy of literature for specification and maintenance practices visit our website idealheating.com where you can download the relevant information in PDF format.

10 / 2026
UIN 252130 A02

CONTENTS

1. Introduction 3
2. Safety 3
3. General Information 4
4. Basic Heat Pump operating Principle 4
5. Basic Logic Air Functions 5
6. Basic Logic Air Controller and Display Functions 6
7. Logic Air Alarms 9
8. Fault Codes 10
9. Troubleshooting 11
10. Warranty 12

SCAN
for Halo Air
User Guide

WEEE DIRECTIVE 2012/19/EU
Waste Electrical and Electronic Equipment Directive

- At the end of the product life, dispose of the packaging and product in a corresponding recycle centre.
- Do not dispose of the unit with the usual domestic refuse.
- Do not burn the product.
- Remove the batteries.
- Dispose of the batteries according to the local statutory requirements and not with the usual domestic refuse.

Ideal Heating is a member of the Benchmark scheme and fully supports the aims of the programme. Benchmark has been introduced to improve the standards of installation and commissioning of central heating systems in the UK and to encourage the regular servicing of all central heating systems to ensure safety and efficiency.

benchmark COLLECTIVE MARK
THE MARK OF QUALITY FOR THE INSTALLATION, COMMISSIONING AND SERVICING OF DOMESTIC HEATING AND HOT WATER SYSTEMS

THE BENCHMARK SERVICE INTERVAL RECORD MUST BE COMPLETED AFTER EACH SERVICE

1. INTRODUCTION

The Logic Air Heat Pump System consists of the following key components.

- Logic Air Monobloc Air Source Heat Pump (installed external to the property).
- Logic Air Domestic Hot Water Cylinder
- Logic Air Control Box (Supplied separately as a wall mounted option or as part of the Logic Air Pre-Plumbed option).

The Logic Air Monobloc Heat Pump is an Air to Water type system and suitable to be installed in a domestic household within a closed loop heating system. The Logic Air Monobloc Heat Pump does not provide a cooling function. The appliance will produce condensate water, a suitable disposal system and drainage point shall need to be installed.

The Heat Pump takes heat from the ambient outdoor air for transfer into domestic hot water or space heating system. This air is not to be ducted or re utilised and must be allowed to flow freely back into the natural environment.

The Logic Air Domestic Hot Water cylinder is to be used to store heat from the Heat Pump. The DHW cylinder is to be installed within a domestic household.

The Logic Air Control Box provides the overall interface and control of the heating entire system. The control box is to be installed within the property, a limited interface is provided for the end user, however a programmable room thermostat will provide the day to day interface such as space heating temperatures and schedule / timer functions.

2. SAFETY

Flammable Refrigerant:

The Heat Pump is charged with R32 which is a flammable, odourless, and colourless refrigerant. In the event of a leak from the refrigerant circuit this can create a hazardous environment. To reduce the risk of a hazardous event, the installation instructions should be followed, and the installation area should be kept clear of ignition sources, including but not limited to; electrical switches, electrical plug sockets, and lamps.

Modification of the Products and Installation Environment:

The product is not to be modified or tampered with in any way that is not defined and approved by this document. Make sure that the requirements for both the products and installation environments are always followed. The end user should be properly informed of the installation area and product requirements during the handover process.

Improper Maintenance:

The product is to be regularly maintained and serviced by an appropriately qualified service engineer. The end user should be properly informed of maintenance and care requirements during the handover process.

Inappropriate Operation:

The product is to be operated as outlined in both this document and the user manuals. The end user must be properly informed of intended and acceptable operation methods during the handover process.

Electrical Risk:

Work on electrical components must only be carried out by a competent electrician. Electrical supplies must be locked in the off position when any work is done near electrical components. Failure to comply with this requirement can result in severe injury or death. If any of the supply cables are damaged, they must be replaced by the manufacturer, its service agent or similarly qualified persons in order to avoid a hazard.

Correct Disposal of Waste:

Waste from the products, such as cardboard, plastics, and refrigerant must be disposed of appropriately and recycled where applicable. Refrigerant must not be released into the atmosphere.

Presence of Frozen Condensate in Walkways:

There is condensate produced by the Heat Pump which can potentially build up around the heat pump and freeze if not properly disposed of. Appropriate disposal methods of the condensate should be implemented and maintained to prevent slipping hazard.

Electrical Safety

Electrical Supply.

Power Supply – 230 V ~ 50Hz

4 & 5 kW Recommended Circuit Breaker size 16A.

8 & 10 kW Model Recommend Circuit Breaker size 32A.

This appliance is to be earthed.

The system is provided with two separate 230V power supplies; one is for the Logic Air Monobloc Heat Pump and shared with the Logic Air Control Box. The second power supply is intended for the backup up heater.

ⓘ **IMPORTANT: This appliance must not be operated without all the covers and casing(s) correctly fitted.**

If it is known or suspected that a fault exists on the system, then it MUST NOT BE USED until the fault has been investigated and corrected by a suitably trained and competent person.

Under NO circumstances should any sealed components on this appliance be used incorrectly or tampered with.

This appliance can be used by children 8 years and above. Also, persons with reduced physical, sensory, or mental capabilities, or lack of experience and knowledge, provided they have been given supervision or instruction concerning use of the appliance in a safe way and understand the hazards involved. Children shall not play with the appliance. Cleaning and user maintenance shall not be made by children without supervision.

3. GENERAL INFORMATION

- During periods of Heat Pump operation, notably during defrost cycles, a plume of steam may be visible. This is normal and due to moisture and/or ice formation evaporating.
- During periods of Heat Pump operation, the appliance will produce condensate water, a suitable disposal system and drainage point shall be installed.
- During periods of Heat Pump operation, both the evaporator fan and compressor speed will change, dependent upon the prevailing conditions and heat output level required. Due to this there may be a noticeable change in the appliance noise levels and tone which is normal.
- The area directly around the Heat Pump should be kept clear at all times. Any items that may restrict the airflow to the Heat Pump such as leaves, litter etc. should be removed immediately as these may negatively affect the operational efficiency.
- The area directly around the Logic Air Control Box should be kept clear at all times. Items such as wet laundry should not be placed upon the control box and general clearances illustrated within the Installation Manual must be respected.

CLEANING

⚠ CAUTION: The Heat Pump contains sensitive components that may be damaged by the use of hose pipes or high-pressure washers.

DO NOT use abrasive cleaning materials and harsh solvents / cleaning solutions.

Logic Air Monobloc Heat Pump Casing:

For normal cleaning of the Heat Pump casing use a weak soap spray solution only. Rinse off soap spray solution with a Low-pressure hose or Low-pressure spray bottle only.

Logic Air Control Box:

For normal cleaning simply dust with a dry cloth. For stubborn marks and stains, wipe with a damp cloth and finish with a dry cloth.

Logic Air Domestic Hot Water Cylinder:

For normal cleaning simply dust with a dry cloth. For stubborn marks and stains, wipe with a damp cloth and finish with a dry cloth.

MAINTENANCE

The frequency of servicing will depend upon the installation condition and usage, but it should be carried out at least annually by a competent Heat Pump engineer.

4. BASIC HEAT PUMP OPERATING PRINCIPLE

The Heat Pump contains a sealed and closed loop refrigerant circuit which contains a mildly flammable refrigerant R-32. When operating, refrigerant is continuously circulated by a compressor where it absorbs heat from the outdoor air which is passed through a heat exchanger and transferring that heat to water which is used in heating and hot water systems.

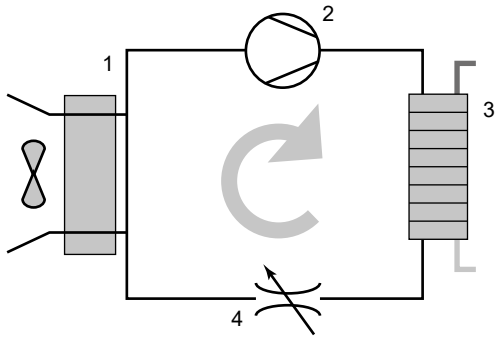

The circuit consists of four main components/functions.

1. Evaporator Heat Exchanger - Refrigerant absorbs heat energy from the outdoor ambient air.
2. Compressor – Refrigerant is compressed and circulated around the closed loop circuit.
3. Condenser Heat Exchanger – Refrigerant transfers heat energy to the heating or hot water systems.
4. Expansion Device – Refrigerant pressure and temperature is transformed.

5. BASIC LOGIC AIR FUNCTIONS

Domestic Hot Water:

If there is a domestic hot water (DHW) Cylinder installed and the temperature of the DHW Cylinder is less than the Hot Water setpoint, the primary heat pump circuit is activated and directed (via the divertor valve) to heat the hot DHW Cylinder.

The Heat Pump will operate until the DHW Cylinder has reached its setpoint. This function will always take priority over the space heating system within the programmed time.

Note: Domestic Hot Water Heating and Space Heating functions cannot operate simultaneously

Space Heating:

If there is a heating demand and the temperature of any thermostat is less than its setpoint, the primary circuit is activated and directed (via the divertor valve) to heat the space heating circuits. The Heat Pump and primary heating circuit circulator will be active until the space heating has reached its setpoint.

Note: Domestic Hot Water Heating and Space Heating functions cannot operate simultaneously

Anti-Legionella:

If there is a DHW cylinder installed, Anti-Legionella measures should be utilised in accordance with HSE guidance HSG274 Part 2. The control system is provided with an Anti-Legionella function for the DHW cylinder, the default parameter, which is adjustable according to the installation and user requirements, initiates this function once per week and heats the DHW cylinder to 60°C for a period of 1 hour.

Logic Air Monobloc ASHP Defrost Method:

During operation, the Heat Pump will periodically be required to go through an automatic defrosting process dependant on the outdoor air temperature and humidity levels. Over time the evaporator will begin to collect water which will then frost. The defrost process causes the accumulated frost to thaw and change to liquid. This liquid water then collects in the base panel and flows through into the condensate drain openings located on the base panel of the Heat Pump. Dependent upon the installation type, the water will drain to ground or a dedicated drainage point.

Cold Start Function:

With the Heat Pump in Standby Mode, if at any time a heating demand is initiated and the primary heating circuit water temperature is below 17oC, then the Heat Pump will not commence operation. As at these water temperatures, deterioration of the appliance may be caused upon start-up.

The Cold Start Function automatically enables and uses alternative energy sources, dependent upon the installation, to heat the primary heating circuit allowing the heat pump to resume operation.

Dependent upon the system configuration the following solutions may provide this function.

System with DHW Cylinder:

If there is a DHW cylinder installed, during this event, the Heat Pump circulator pump and DHW cylinder back up heater will operate only to increase the primary circuit water temperature. Once 22 °C is achieved the DHW back up heater will be terminated, and normal Heat Pump operation may then resume.

No DHW Cylinder:

If no DHW cylinder is installed, a supplementary back up immersion heater installed within the primary heating circuit must be fitted to provide this function. In this event the supplementary back up heater will operate in the same way detailed above and heat the primary heating circuit water to 22 °C, at which point the supplementary back up heater will be terminated, and normal Heat Pump operation may then resume.

Combi - Boiler Back Up:

When using a combustion Combi-Boiler configuration with no DHW cylinder, the boiler will operate to provide this functionality. In this event the boiler will operate in the same way detailed above and heat the primary heating circuit water to 22 °C, at which point the boiler operation will be terminated and normal Heat Pump operation may then resume.

Frost Protection (Appliance):

Note: Only if the appliance is in standby mode and with no DHW or space heating demand.

If the outdoor air temperature is ≤ 1°C, Plant Frost Protection will be initiated. During this event, the Heat Pump circulator pump and central heating zone pumps (if applicable) will operate continuously to prevent the primary heating water from freezing.

If the outdoor air temperature is ≤ 1 - 5°C, Plant Frost Protection will be initiated. During this event, the Heat Pump circulator pump and central heating zone pumps (if applicable) will operate intermittently to prevent the primary heating water from freezing.

Frost Protection (Condenser):

If the primary circuit water temperature is ≤ 4 °C and the Heat Pump has power but is in Standby Mode i.e., no DHW, CH or Anti-Legionella demand, Condenser Frost Protection will be initiated. Firstly, the Heat Pump circulator pump will initiate, if after a defined time period, the primary circuit water temperature is still ≤ 4 °C the backup heater will initiate to raise the temperature to 22 °C. Once this temperature is achieved the backup heater will be terminated and normal Heat Pump operation may then resume. Note: The backup heater utilised in this mode will depend upon the system configuration (refer to Section *2.7.6 Cold Start Function on page 24* for available solutions).

Frost Protection (Dwelling):

If the temperature of the dwelling is ≤ 8 °C, the room frost protection mode will be initiated to prevent damage to the central heating system. During this event, the Central Heating zone pumps will be operated intermittently.

Weather Compensation:

Weather compensation regulates and maintains optimum flow temperatures which allows the heat pump to run more efficiently. This function will modulate the water flow temperature relative to the external ambient temperatures. The lower the outdoor air temperature, the higher the flow temperature and vice versa.

There are two types of weather compensation available and as described below:

Weather Compensation Alone:

With this mode selected, the primary flow temperature is calculated based on a heating curve, depending only on the average outside temperature. The weather compensation function is initiated with a permanently enabled outdoor temperature sensor within the outdoor unit.

Combined Weather Compensation & Room Compensation:

With this mode selected, the primary flow temperature is calculated based upon a heating curve and dependent upon the ambient air temperature and the dwelling room temperature. The current room temperature and its variation from the actual setpoint is acquired and considered when controlling the heat pump flow temperature. This way, consideration is given to room temperature deviations, ensuring more accurate room temperature control and optimum efficiency.

6. BASIC LOGIC AIR CONTROLLER AND DISPLAY FUNCTIONS

The Heat Pump controls are located on the front of the control box. This is the centralised control for the full heating system.

ⓘ **IMPORTANT: To use the control screen the dial can be rotated clockwise to move selection downwards, anti-clockwise to move selection upwards, and pressed to select. When options are selected, the dial can be turned to cycle through the setting options. To exit menus or return to previous screens, a selectable option will be displayed at the bottom of the screen.**

- Rotate the dial clockwise for downwards selection
- Rotate the dial anti-clockwise for upwards selection
- Press the dial to make selection

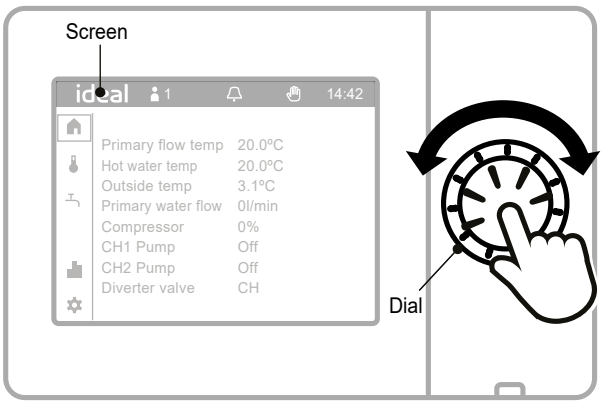

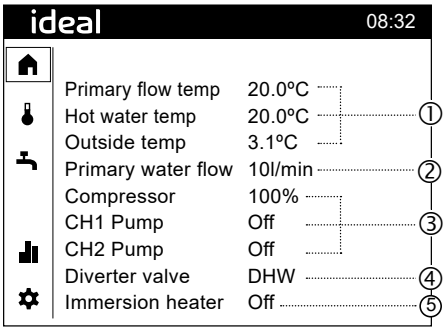

STATUS SYMBOLS	
	Symbol 'Alarm' indicates a plant error.
	Symbol 'Maintenance/Special operations' indicates the presence of a maintenance message or special operation feedback.
	Symbol 'Event' indicates an event message from the plant.
	'Hand' symbol The 'Hand' symbol is displayed if the plant/zone switch setting is changed by making an adjustment on the topic pages. Adjustments made on the topic pages can be reset at the plant/zone switch.
12:00	The device clock is synchronized with the clock from the connected controller.
	Indicates Installer access level active
	Symbol 'Producer' indicates the main producer (e.g. oil/gas boiler, heat pump) that is currently switched on.
NAVIGATION SYMBOLS	
	Default Screen
	Space Heating
	Domestic Hot Water
	System Information
	Settings Menu
	Return to Previous Screen
	Test Function
	Installer Functions
OPERATING MODES	
①	Operating Temperatures
②	Water Flow from Heat Pump to Indoor Unit
③	Heat Pump Output
④	Hot Water and Central Heating System Control Actuator Status
⑤	Details on Immersion Heater - On/Off

Creating a Space Heating Demand:

The Space Heating function will be controlled via the use of a Logic Halo Air or equivalent Programmable Room Thermostat (PRT). ON/OFF Room Thermostats are not recommended to be used in conjunction with this appliance as they may negatively affect the system performance and provide no optimisation potential.

Increase the room temperature setpoint until the space heating system switches ON.

Decrease the room temperature setpoint until the space heating system switches OFF.

Domestic Hot Water Heat Demand:

The below figure is the main menu screen and displays the heating system information and status.

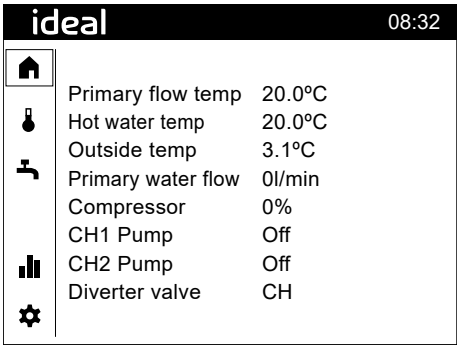

Rotate the dial to highlight functions and change values, press the dial to select the function and confirm changes. To create a hot water demand, select the tap icon in the left-hand column.

The following screen will be shown:-

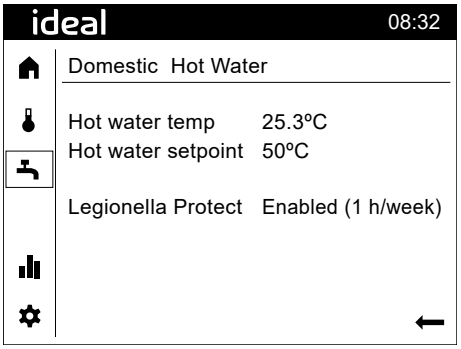

To change the setpoint, select the setpoint function and increase the value to 65°C. Next return to the home screen by selecting the back arrow and then the home symbol. If domestic hot water is scheduled to be on then the display will change to the following:-

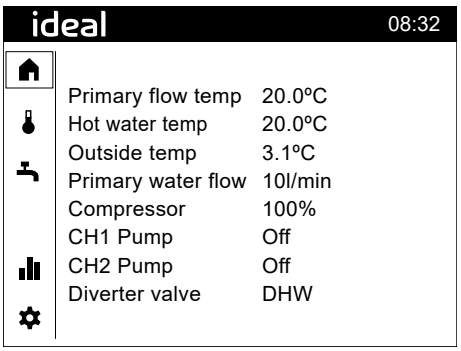

SETTING THE CENTRAL HEATING SCHEDULE

On/Off non-programmable room stats only

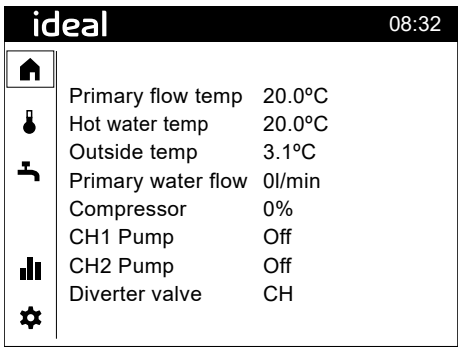

Starting from the Home Screen (see above), to set a central heating programme, rotate the dial until the thermometer icon in the left-hand column is highlighted and press the dial. The following screen will be shown:-

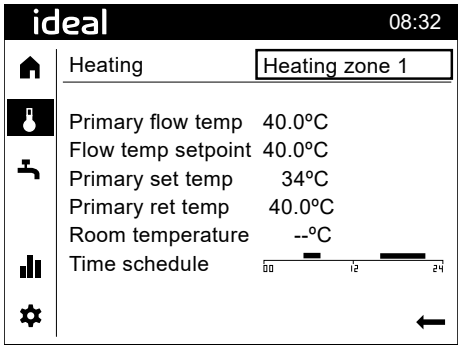

Press the dial and then rotate the dial until the desired central heating zone is shown then press the dial again, rotate the dial until the schedule is highlighted and then press the dial again. The following schedule screen will be shown:-

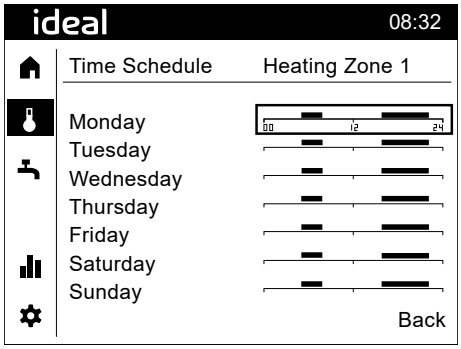

Rotate the dial until the desired day for setting is shown and then press the dial.

If domestic hot water is scheduled to be on then the display will change to the following:

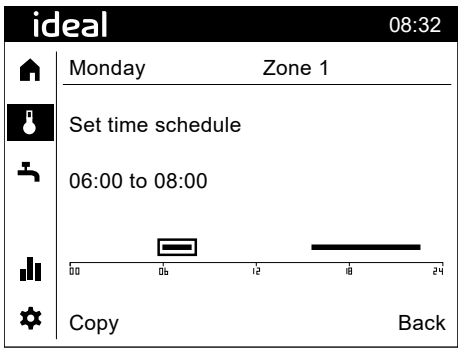

Move the highlighted area to the time you wish to change using the dial and press the dial, then rotate the dial to change the time and press the dial to save.

SETTING TIME/DATE

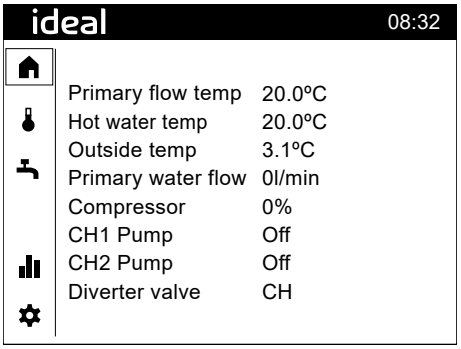

Starting from the Home Screen (see above), to set time/date, rotate the dial until the settings icon in the left-hand column is highlighted and press the dial. The following screen will be shown:-

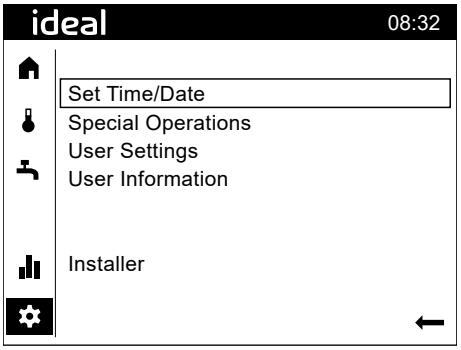

Rotate the dial until Set Time/Date is highlighted and then press the dial and the following screen will be shown:-

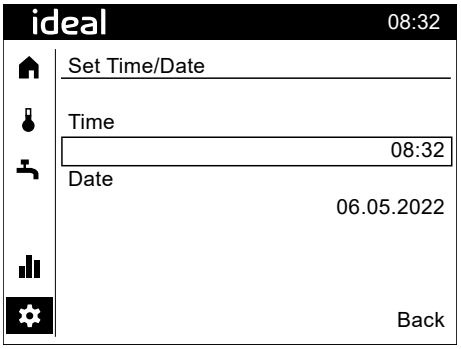

Rotate the dial until the Time is highlighted and press the dial then rotate the dial to change the time and press the dial to save.

Rotate the dial until the Date is highlighted and press the dial then rotate the dial to change the date and press the dial to save.

SWITCHING THE DHW IMMERSION HEATER ON

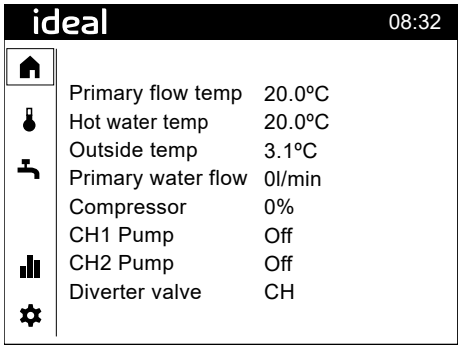

Starting from the Home Screen (see above), to switch the DHW immersion heater on, rotate the dial until the settings icon in the left-hand column is highlighted and press the dial. The following screen will be shown:-

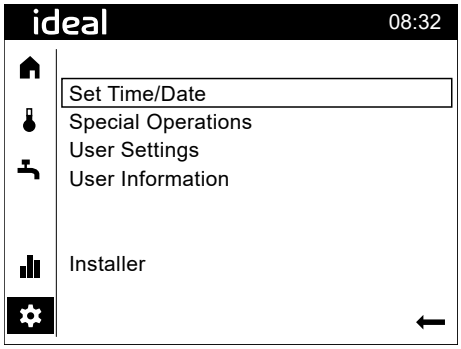

Rotate the dial until Special operations is highlighted and then press the dial and the following screen will be shown:-

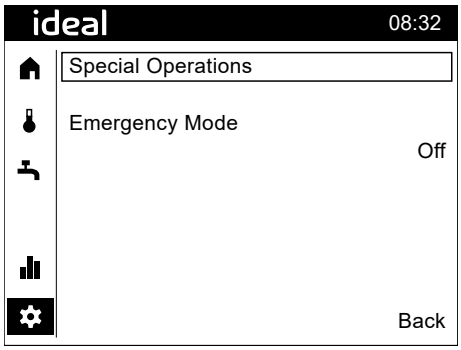

Rotate the dial until the Emergency Mode setting is highlighted and press the dial then turn the dial to change the setting and press the dial to save

CHANGING THE COMFORT SETPOINT

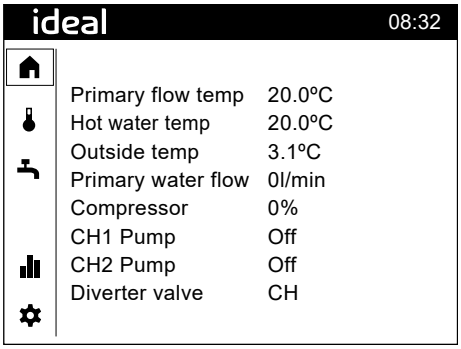

Starting from the Home Screen (see above), to change the Comfort setpoint, rotate the dial until the settings icon in the left-hand column is highlighted and press the dial. The following screen will be shown:-

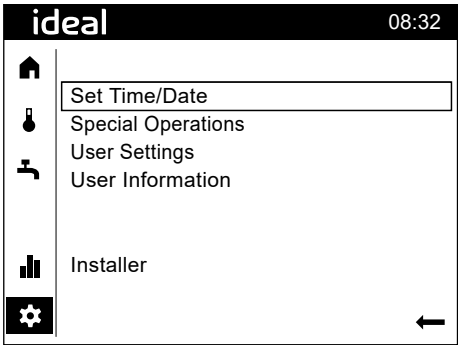

Rotate the dial until User settings is highlighted and then press the dial and the following screen will be shown:-

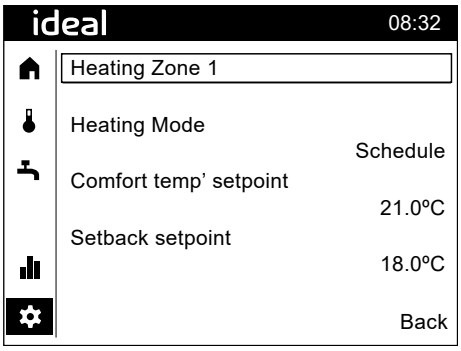

Press the dial and rotate the dial until the desired central heating zone is shown, then press the dial. Rotate the dial until "Comfort temp setpoint" is highlighted and press the dial, then rotate the dial to change the temperature and press the dial to save.

LOGIC AIR ALARMS

Any active faults will be displayed on the home screen.
A bell icon will display in the upper part of the control screen.
Active alarms can be viewed by following the instruction below:

Starting from the Home Screen, navigate to the System Information in the left-hand column and select. The following screen will be shown: -

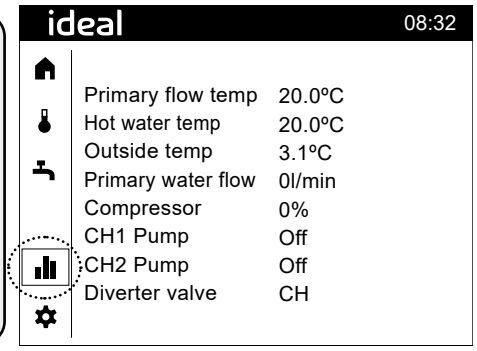

Any active alarms will then be displayed. If multiple alarms are active at the same time these will be shown on additional screens which can be navigated to individually.

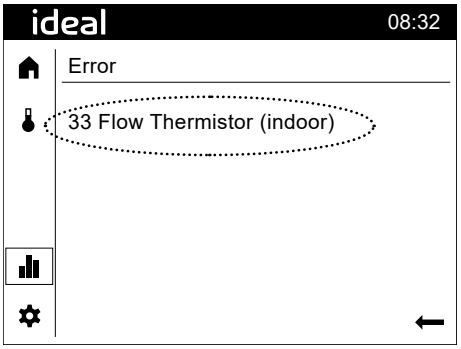

7. FAULT CODES

Fault ID No.	Fault Description
10	Outside Sensor Fault
26	Header Thermistor Fault
33	Flow Thermistor (Indoor) Fault
44	Return Thermistor Fault
50	DHW Thermistor Fault
60	Room Stat 1 Fault
65	Room Stat 2 Fault
81	LPB short-circuit/comm Fault
82	LPB address collision Fault
83	BSB short circuit Fault
84	BSB address collision
100	2 clock time masters Fault
102	Clock without backup Fault
105	Service Required
106	Source temp too low
126	7093 DHW Setpt Fault
127	Anti-Legionella Temp' Fault
134	Re-occurring Heat Pump Fault
146	Configuration error
171	Alarm contact 1 active Fault
366	Room temp sensor Fault
369	External Fault
385	Low Mains Voltage Fault
489	No Cascade Master Fault
490	No outdoor connection Fault
499	No outdoor connection Fault
506	Boiler no temp' rise Fault
516	No outdoor connection Fault
7	No heat pump starts exceeded
370	Heat Pump fault:- F0 No outdoor connection fault
370	Heat Pump fault:- F1 No outdoor connection fault
370	Heat Pump fault:- F2 Outdoor HX thermistor fault
370	Heat Pump fault:- F3 Heat Pump inverter fault
370	Heat Pump fault:- F4 Outdoor electrical filtering fault
370	Heat Pump fault:- F5 Outdoor discharge thermistor
370	Heat Pump fault:- F6 Compressor Thermistor fault
370	Heat Pump fault:- F7 Outdoor intermediate HX thermistor
370	Heat Pump fault:- F8 Outdoor outlet HX thermistor
370	Heat Pump fault:- F9 Heat Pump defrost thermistor fault
370	Heat Pump fault:- F10 Outdoor heatsink thmr fault
370	Heat Pump fault:- F11 outdoor PFC thermistor fault
370	Heat Pump fault:- F12 Outdoor exp valve thmr
370	Heat Pump fault:- F13 Outdoor electrical error
370	Heat Pump fault:- F14 outdoor pressure sensor fault
370	Heat Pump fault:- F15 Heat Pump current trip
370	Heat Pump fault:- F16 Heat Pump compressor fault
370	Heat Pump fault:- F17 Heat Pump fan fault
370	Heat Pump fault:- F18 Outdoor discharge temp'
370	Heat Pump fault:- F19 compressor temperature fault
370	Heat Pump fault:- F20 outdoor low pressure
370	Heat Pump fault:- F21 outdoor power supply fault
370	Heat Pump fault:- F22 no outdoor connection
370	Heat Pump fault:- F23 hydraulic HX temperature
370	Heat Pump fault:- F24 Primary circulation pump
370	Heat Pump fault:- F25 Evaporator outlet thermistor
370	Heat Pump fault:- F26 Outdoor power supply
370	Heat Pump fault:- F27 no water flow fault

8. TROUBLESHOOTING

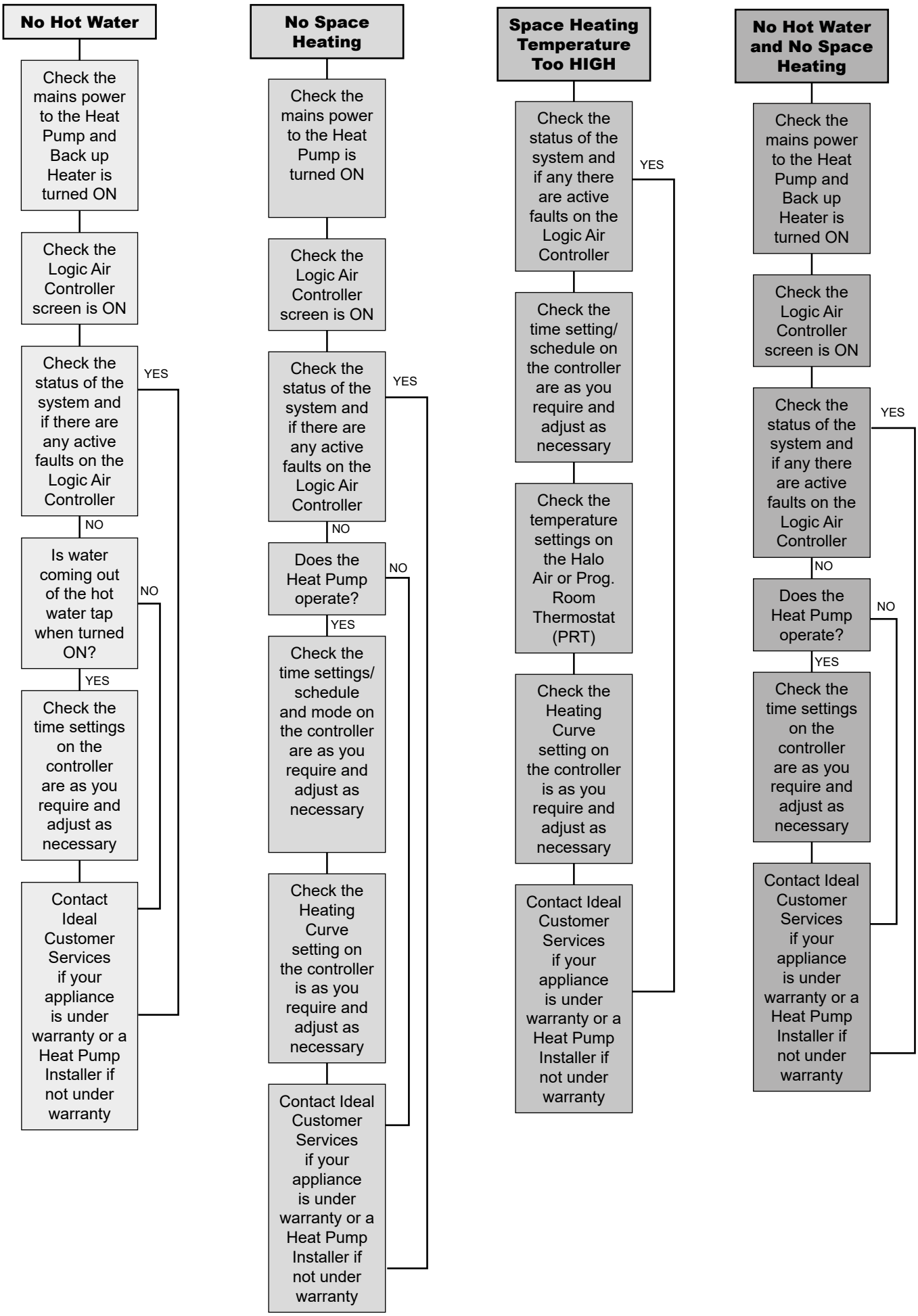

9. WARRANTY

At the end of each 12-month period after commissioning, the Heat Pump must be serviced by a suitable competent heat pump engineer in accordance with the process in the manufacturer’s instructions. Should this condition not be met the Heat Pump warranty will lapse.

At Ideal Heating we take our environmental impact seriously, therefore when installing any Ideal Heating product please make sure to dispose of any previous appliance in an environmentally conscious manner. Households can contact their local authority to find out how.
See https://www.gov.uk/managing-your-waste-an-overview for guidance on how to efficiently recycle your business waste.

Technical Training

Our Expert Academy offer a range of training options designed and delivered by our experts in heating.
For details please visit: expert-academy.co.uk

Ideal Boilers Ltd., pursues a policy of continuing improvement in the design and performance of its products.
The right is therefore reserved to vary specification without notice.

Ideal is a trademark of Ideal Boilers.

Registered Office

Ideal Boilers Ltd., National Avenue, Hull, East Yorkshire, HU5 4JB
Tel 01482 492251 Fax 01482 448858

Registration No. London 322 137

EU Authorised Representative:
Atlantic SFDT
44 Boulevard des Etats-Unis, 85 000 La Roche-Sur-Yon, France
+33 (0)2 51 44 34 34

Ideal Technical Helpline: 01482 498663
Ideal Consumer Helpline: 01482 498660
Ideal Parts: 01482 498665

idealheating.com

ROI Installer Helpline: 00353 (0)1 961 7700

service@idealenergy.ie